PRO SN10 HS LIFT • PRO SN10 183 • PRO IC05

PRO SN06 • PRO SN08 • PRO SN10 • PRO SN12

PRO SN10 HS • PRO SN08 LIFT • PRO SN10 LIFT



OPERATION
AND SERVICE MANUAL

Installation • Operation • Maintenance • Service

Some functions be different depending on the models or configurations. Please refer to the actual machine when operating. Machine functions and operating instructions may be updated and modified without further notice.

Waste Electrical and Electronic Equipment (WEEE)
This symbol on the product or its packaging indicates that this product must not be disposed of with household waste. Instead it is your responsibility to take the product to a designated collection point for the recycling of electrical and electronic equipment. Proper disposal and recycling helps prevent negative consequences for the environment and human health. For more detailed information about recycling of this product, please contact your local authority, your household waste disposal service, or the retailer from whom you purchased the product.

© 2025 Quvend Ltd All rights reserved
This manual and the information contained herein are the property of Quvend Ltd. and are protected by copyright law and international treaties. No part of this publication may be reproduced, distributed, or transmitted in any form or by any means—electronic, mechanical, photocopying, recording, or otherwise—without the prior written permission of Quvend Ltd.
Unauthorized use, disclosure, or duplication of this document, or any portion thereof, may result in civil and criminal penalties.

www.oproo.com

TRANSLATED • November 2026

Table of Contents

TABLE OF FIGURES 4

TECHNICAL SUPPORT / SPAREPART SUPPLY 4

PUBLICATION NOTICE 4

MENU CODES 4

1. INTRODUCTION 5

1.1. INTENDED USE 5
1.2. AUTHORIZED PERSONS 5
1.3. SENSOR SYSTEM 6
Guaranteed Delivery 6
Instant Refund 6
Additional Benefits: 6
1.4. MODEL IDENTIFICATION 6
1.5. GENERAL SPECIFICATIONS 6
Operating Environment 6
Electrical Related data 6
Coler related 6
Coin Mechanisms and Bill Validators 6
1.6. MERCHANDISER CONFIGURATIONS 7

2. SAFETY 9

2.1. COMMITMENT TO SAFETY 9
2.2. SAFETY PRECAUTIONS 9
High Voltage Contact 9
Grounding 10
Spring Motion and Jamming 10
Vending machine Tipping 11
–FIRE HAZARD 11
Other Improper Conditions 12
WARNING 12
2.3. TEST STANDARDS 12

3. VENDING MACHINE SYSTEMS AND COMPONENTS 13

3.1. VENDING OPERATION 13
INFORMATION TO BE PROVIDED TO CUSTOMERS 13
3.2. CONTROL BOARD 14
Upgrading Software 14
Mode Switch 14
DEX Jack (if customized) 14
3.3. DOOR 15
– FINGER TRAPPING HAZARD 15
3.4. VEND 15
SENSOR Primary 15
Sensor 15
3.5. PHERIPHERIES 15
Validator & Debit Card Reader Locations 15
Changer Location 15
Coin Box 15
Door Switch 15
Display 15
Keypad 15
Coin Return Switch 15
Lighting Options 16
3.6. TRAY RAILS 16
3.7. TRAYS 16
OPROO PRO Vend Motors 16
3.8. ELECTRICAL BOX 16
Power Switch 16
Transformer 16
RFI Filter 17
Springs 17
Dividers 17
Relay 17
Power Distribution Harness 17
Ground Attachment 17

4. VENDING MACHINE PREPARATION AND INSTALLATION 18

4.1. INSTALLATION GUIDE – FIRST STEPS 18
4.2. CONFIRMING POWER AT OUTLET 19
Checking the Outlet 19
Electrical Service Requirement for CE Compliance 19
ELECTRICAL SERVICE REQUIREMENT FOR CE COMPLIANCE: 19
4.3. VENDING MACHINE PREPARATION 19
Mounting and Connecting Bill Validators and Card Readers 19
Mounting and Connecting Coin Mechanism (Changer) 20
Testing Motors 20
Product Loading Test 20
Installing Price Labels (Factory installed) 21
Setting Prices 21
ON-SITE INSTALLATION 21
Placing the Vending machine in Location 22
Leveling the Vending machine 22
4.4. FOOD SAFETY AND MERCHANDISING 23
TOOLS REQUIRED 24

5. VENDING MACHINE SAFETY PRECAUTIONS 25

6. TRAY CONFIGURATION AND ADJUSTMENT 26

6.1. TRAY INSTALLATION 26
6.2. TRAY REMOVAL 26
6.3. COIL TRAY 26
1. Change divider 26
2. Change spring 26
3. Change adapter 26
4. Change motor 26
5. Change support bar 27
6.4. PRODUCT PLACEMENT 27
6.5. SPRING SELECTION COUPLING 27
6.6. CONVEYOR TRAY 27
6.7. DIFFERENCE FROM COIL TRAY 27

7. SERVICE PROGRAMMING 29

7.1. SERVICE MODEL 29
7.2. BASIC MENU (888888) 29
7.2.1. General Setting 29
7.2.2. Payment System 29
7.2.3. Selection Management 29
7.2.4. Sales Statistics 29
7.2.5. System Setting 30
7.2.6. Fault Diagnosis 30
7.3. SUPER MENU (125808521) 31

© 2025 Quvend Ltd All rights reserved

7.3.1. Payment System 31
7.3.2. Selection Management 31
7.3.3. System Setting 31
7.3.4. Fault Diagnosis 31
7.3.5. Lift System 32
7.4. BOOT INTERFACE INFORMATION 32

8. TEMPERATURE CONTROLLER MANUAL 33

A. SPECIFICATIONS 33
B. CONTROL PARAMETERS 33
C. PANEL DISPLAY INSTRUCTIONS 34
D. FAULT DIAGNOSIS 35

9. TROUBLESHOOTING 36

9.1. OUT OF SERVICE 36
9.2. MACHINE ERROR DISPLAY 36
9.3. MACHINE TROUBLE SHOOTING CHART 36
Machine Trouble Shooting Chart 36
9.4. TEMPERATURE CONTROLLER ERROR CODE DISPLAY 37
9.5. COOLING SYSTEM TROUBLESHOOTING 37
The internal temperature does not decrease as expected (EA2) 38
"LL" is displayed 38
Ice formation is visible 38
Temperature-controller communication failure 38
Water is visible inside or underneath the machine 38
9.6. LIFT SYSTEM TROUBLESHOOTING 39

10. MAINTENANCE 40

10.1. UPGRADING FIRMWARE 40
10.2. CLEANING THE VENDING MACHINE EXTERIOR 40
10.3. CLEANING THE VENDING MACHINE INTERIOR 41
10.4. LUBRICATION WITH LITHIUM GREASE 41
10.5. LAMP REPLACEMENT 41
Replacing Optional LED Lamps 41
10.6. UTILITY 41
10.7. REPLACING THE POWER CORD- QUALIFIED SERVICE PERSONNEL ONL 42
TOOLS REQUIRED: 42
REMOVAL & INSTALLATION 42
INSTALLATION 42
10.8. STORING THE VENDING MACHINE 42
10.9. MAINTENANCE SCHEDULE: 43
10.10. CLEANING THE CONDENSER AND THE AIR FILTER: 43
10.11. REPLACEMENT PARTS 44

10. WIRING DIAGRAM, CONFORMITY CERTIFICATE 45

11. LIMITED WARRANTY 49

I. GENERAL PROVISIONS 49
1. Scope 49
2. Exclusion of Conflicting Terms 49
3. Written Agreements 49
4. Intellectual Property 49
II. ORDERS 49
1. Confirmation 49
2. Order Scope 49
3. Technical Data 49
III. DELIVERY OBLIGATIONS 49
IV. DELIVERY TIME AND RISK TRANSFER 50
V. PRICES 50
1. Price Basis 50
2. Price Changes 50
VI. PAYMENT TERMS 50
VII. WARRANTY FOR MATERIAL DEFECTS 50
1. Quality Specification 50
2. Inspection Duty 50
3. Exclusions from Warranty 50
4. Warranty Remedy 51
5. Warranty Period 51
6. Buyer-Provided Accessories 51
7. Returns 51
VIII. LIMITATIOY OF LIABILITY 51
IX. TERMINATION OF CONTRACT 51
X. USE OF SUBCONTRACTORS 51
XI. PRODUCT INFORMATION 51
XII. MISCELLANEOUS 52
1. Withdrawal Rights 52
2. Data Protection 52
3. Language 52
XIII. GOVERING LAW AND JURISDICTION 52
1. Place of Performance: 52
2. Jurisdiction: 52
3. Applicable Law: 52
XIV. IWEEE COMPLIANCE 52

© 2025 Quvend Ltd All rights reserved

TABLE OF FIGURES

Figure 1.1 Typical Serial Plate 6
Figure 3.1 Control Board Components 14
Figure 4.1 Leveling the Vending machine 24
Figure 6.1 Coil Tray 26
Figure 6.2 Conveyor Tray 27
Figure 7.1 Boot interface 32
Figure 9.1 Loading Control Software 40
Figure 9.2 Power Cord and Protective Slot 42
Figures WIRING DIAGRAM, CERTIFICATES 45-48

TECHNICAL SUPPORT / SPAREPART SUPPLY

Please contact your local distributor listed on **www.oproo.com**

PUBLICATION NOTICE

It is our intent to assist our customers with up-to-date documentation: however, this manual may not contain all updates and is subject to revision without notice. Please contact our Service Department with your requests or comments.

MENU CODES

Basic Menu code: 888888

Super Menu code: 125808521

© 2025 Quvend Ltd All rights reserved

1. INTRODUCTION

Congratulations on your choice of OPROO PRO machine. All ORPOO PRO models are multifunctional, high-capacity vending machines. This model has been designed, tested and manufactured to provide years of reliable, low-maintenance services in indoor environments. Its functions and flexible product configuration are just some of the many built-in functions of every OPROO PRO vending machine.

1.1. INTENDED USE

The OPROO PRO SN Series vending machine is intended for the automated storage and dispensing of packaged food products, beverages and other suitable packaged consumer goods.
Only products whose dimensions, weight, packaging, storage requirements and physical properties are compatible with the selected tray, coil, conveyor belt and temperature settings may be loaded into the machine.
The machine shall only be installed, operated, stocked, cleaned and maintained in accordance with this manual and the information shown on the rating plate. (only by trained professionals)
The following uses are prohibited:

- storing or dispensing unpackaged food;
- storing leaking, damaged, contaminated or inadequately sealed products;
- storing flammable, explosive, corrosive, toxic or otherwise hazardous substances;
- storing products requiring a temperature that the machine cannot reliably maintain;
- using the machine for pharmaceutical or medical products unless the specific machine configuration has been expressly approved for that purpose;
- making unauthorised modifications to the machine, its safety devices, electrical system, refrigeration system or software;
- using the machine for any purpose other than that specified by the manufacturer.

Any other use is considered improper use and may result in personal injury, damage to the machine or damage to the products stored inside.

1.2. AUTHORIZED PERSONS

For the purposes of this manual, the following categories of persons are distinguished:
Customer/end user: A person who selects, pays for and collects a product from the machine.
Operator: A person who has been instructed by the machine owner to stock products, collect cash, perform routine cleaning and carry out the operator-level settings described in this manual.
Qualified installer: A person with the training and equipment required to transport, position, level, secure and commission the machine safely.
Qualified service technician: A person with the technical training and authorisation required to service electrical, mechanical or electronic components.
Qualified refrigeration technician: A person appropriately trained and authorised to work on refrigeration systems containing the flammable refrigerant R290.
Customers and unauthorised persons must not open the machine or access internal components. Electrical, mechanical and refrigeration repairs must only be carried out by appropriately qualified personnel.

© 2025 Quvend Ltd All rights reserved

1.3. SENSOR SYSTEM

The induction system of our machine can directly detect the product when the product falls. There is an infrared detection plane above the pick-up port, through which the product can sense whether the product has fallen to the pick-up port. Using this technology, the Vending machine "knows" whether your customer has received the product. Lift models has the sensor built into the lift. This induction system has several important advantages.

Guaranteed Delivery

If the product hangs during the sale, the spiral can be rotated an additional 1/4 turn to try to deliver the product. No need to beat or shake the vending machine to get the undropped product.

Instant Refund

If the customer does not receive a product, he can receive a full refund by pressing the coin return, or he can select another product. No more refund requests!

Additional Benefits:

The induction system has an adjustable function, adjusting the sensitivity of the sensor can be used correctly in different environments.
Disabling or blocking the sensor will not allow vandals to receive free product. The Sensor can over-ride blocked or malfunctioning sensors and still vend.
Opening the glass door of the machine will cause condensation to form inside, but it will recover after a few minutes after closing the door and will not affect the detection of the sensor.

1.4. MODEL IDENTIFICATION

When requesting service, replacement parts or technical assistance, please copy the information on the Vending machine's serial number plate (see Figure 1.1). It is installed in the lower left corner of the back of the machine, also inside the machine on the right wall. The information contained on this nameplate is necessary to determine which parts, kits or maintenance should be applied to your specific model.



Figure 1.1 Typical Serial Plate

It is a 10-selection with refrigeration.

1.5. GENERAL SPECIFICATIONS

Operating Environment

The product is suitable for the altitude below 2000 meters, and usage is indicated on the data table. in case of “indoor use only” the rating of the machine is IP0X, and ambient range should be minimum +2 °C and below +32 °C.

Electrical Related data

Rated voltage: 220-240VAC 50-60Hz.
Standby power:76.16W
Rated power: 550W±10%
Maximum power: 1100W

Coler related

Refrigerant: R290, 80G
Refrigeration temperature:2~25℃ (IC05: -20-0°C)
Other data: All data of the vending machines are included in the machine label

Coin Mechanisms and Bill Validators

© 2025 Quvend Ltd All rights reserved

OPROO PRO Vending machines will support all Multi-Drop Bus (MDB) coin mechanisms, bill validators and card readers. Where applicable, it will also support the "Executive Mechanism" Coin Changer.



– **FIRE HAZARD:** This appliance contains the flammable refrigerant **R290**.

- Keep the ventilation openings in the appliance and its enclosure free from obstruction at all times.
- Do not damage the refrigerant circuit.
- Do not use mechanical devices or any othermeans to accelerate the defrosting process other than those recommended by the manufacturer.
- Do not operate electrical appliances inside the product storage compartment of the vending machine.
- Work on the refrigerant circuit may only be carried out by a certified refrigeration technician or service company.
- The vending machine must be installed in a room with a minimum floor area of **1.1 m²**.

1.6. MERCHANDISER CONFIGURATIONS

It has 6 layers and 10 columns. The number in the picture represents the spring pitch (the number of products that can be placed).

This is a standard selection, customers can change the number and size of selection according to their needs

Capacity/ Slot (PCS)		Capacity/ Slot (PCS)		Capacity/ Slot (PCS)		Capacity/ Slot (PCS)		Capacity/ Slot (PCS)	
8L	8R	8L	8R	8L	8R	5L	5R	5L	5R
16L	16R	16L	16R	16L	16R	16L	16R	16L	16R
12L	12R	12L	12R	12L	12R	16L	16R	16L	16R
6L	6R	6L	6R	6L	6R	6L	6R	6L	6R
6L	6R	6L	6R	6L	6R	6L	6R	6L	6R
8L	8R	8L	8R	8L	8R	8L	8R	8L	7R

Example: SN10 PRO models using typical configuration

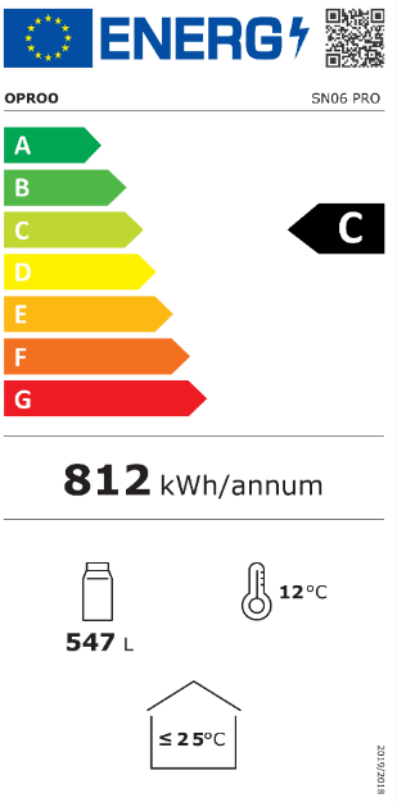

Example: Typical Energy Label

© 2025 Quvend Ltd All rights reserved

© 2025 Quvend Ltd All rights reserved

MODEL COMPARISON

Compare the PRO range.

Dimensions, construction and configuration across ten indoor vending models.

MODEL / FEATURE	PRO SN SERIES					PRO SN LIFT		PRO SN HS		FROZEN FOOD
	 SN06	 SN08	 SN10	 SN10 183	 SN12	 SN08 LIFT	 SN10 LIFT	 SN10 HS	 SN10 HS LIFT	 IC05
DIMENSIONS										
Depth / mm	865	865	865	865	865	865	865	865	865	990
Width / mm	740	965	1130	1180	1340	965	1130	1190	1190	875
Height / mm	1920	1920	1920	1828	1920	1920	1920	1920	1920	1920
Weight / kg	245	275	300	280	320	290	315	360	385	310
CONSTRUCTION & PERFORMANCE										
Body	1 door	1 door	1 door	2 doors	2 doors	1 door	1 door	2 doors	2 doors	1 door
Spiral width / positions	6	8	10	10	12	8	10	10	10	5
Temperature / °C	2 to 20	2 to 20	2 to 20	2 to 20	2 to 20	2 to 20	2 to 20	2 to 20	2 to 20	-22 to 0
Energy class	C	C	C	C	C	C	C	C	C	C
Certificates	CE + TÜV	CE + TÜV	CE + TÜV	CE + TÜV	CE + TÜV	CE + TÜV	CE + TÜV	CE	CE	CE

STANDARD FEATURES & OPTIONS

01 / Construction & layout

Indoor use • standard matt black exterior • black interior
Nano-coated, break-resistant, anti-fog heated glass
Mainly metal shelves • 500 mm spirals • double spiral ready
EU layout: 2 PET, 1 can and 3 snack shelves
Spiral or belt shelves; layout configurable on request
Exterior and interior customization available for 50+ units

02 / Technology & payment

R290 refrigerant • LED lighting • drop sensor
SN models: cooling and heating, 2 to 20°C
Coin compatibility: inlet, slides and cash unit
Space for banknote validator • cash payment supported
MDB compatible: Nayax, Televend, PayTer and others
Energy class C across all listed models

03 / Localization & support

Technical service menu: EN / DE
User interface: EN, DE, HU, SK, BG, CZ, RO, HR, PL
Manuals: EN, DE, HU, SK, BG, CZ, RO, HR, PL, UA
Spare parts: EU stock in Budapest
50+ units: design LED lights, wheels, exterior colour, interior colour and metal set options

COMMERCIAL OPTIONS Trade-in • price match • low-price warranty • extended warranty option • snack + coffee combo promotions

2. SAFETY

2.1.

DANGER
indicated a hazard which a high level of risk which, if not avoided, will result in death or serious injury

WARNING
indicates a hazard with a medium level of risk which, if not avoided could result in death or serious injury

CAUTION
indicates a hazard with a low level of risk which, if not avoided could result



COMMITMENT TO SAFETY

OPROO PRO is committed to designing and producing safe products. As with all electrical or mechanical equipment, there are some potential hazards. The purpose of the automated sales system is to remind the personnel who will be repairing our equipment to pay attention to these potential hazards through this manual and the training of maintenance technicians, and to provide basic safety guidelines.
To reduce the risk of serious injury or death, please read and follow all warnings in this manual. It should be pointed out that these warnings are not comprehensive. It is impossible for an automated sales system to predict all possible service methods, nor can it predict all possible safety hazards that may be caused by the service. Therefore, we always urge you to beware of dangers such as electric shock, mechanical jamming and dumping of Vending machines during the movement.
The automated sales system strongly recommends that all service personnel or organizations make a commitment to safety. Only personnel who have been properly trained in the Vending machine's services should attempt to perform any repairs on the Vending machine's internal components. Once the Vending machine leaves our factory, the automated sales system cannot control it.
Keeping the Vending machine in a safe state is the sole responsibility of the owner.

2.2. SAFETY PRECAUTIONS

Below are listed safety precautions and safe practices to follow to avoid injury from selected hazards. This list cannot possibly cover all hazards, therefore

please remember to

++ THINK SAFETY FIRST! ++

High Voltage Contact

Each Vending machine is designed to operate at a specific voltage, single phase 220-240VAC 50-60Hz. The voltage is specified on the serial number plate (see section 1.2 Model identification). The high-pressure area includes electrical panels, refrigeration units and fans. It is important to understand that contact with high-voltage lines can cause personal injury or death. Kennzeichnet eine Gefährdung mit geringem Risiko, die, wenn sie nicht

© 2025 Quvend Ltd All rights reserved

vermieden wird, zu ... führen kann.



- high-voltage can cause personal injury or death

1. Always test the outlet for proper voltage, polarity and grounding before plugging in the Vending machine
2. Always disconnect power to the Vending machine before servicing. Allow only fully trained service technicians to service the Vending machine if service must be performed with the power on.
3. Always keep electrical connections dry. Do not place the Vending machine in or near standing water
4. Never use a worn or damaged power cord

Grounding

Certain electrical components have a yellow-green ground wire connected to the Vending machine's ground point. If you need to remove the ground wire during maintenance, please pay attention to how the wire is connected, including the location of any gaskets. After repairing, make sure that the wires and gaskets are completely replaced as they are. Please note that the supplier may work normally without a ground wire, but ungrounded components may present a risk of electric shock.



- risk of electric shock

1. Before plugging into the Vending machine, always test that the outlet is properly grounded.
2. Be sure to reconnect the ground wire after repair.

Spring Motion and Jamming



Energized vend motors can turn a spring with considerable torque, creating a possible entrapment hazard.



Energized vend motors can turn a spring with considerable torque, creating a possible entrapment hazard
Also, turning helices may eject tools or other objects left on trays. A spring that is jammed or caught can store energy as it binds, which can cause it to twist or spring outward suddenly even if power is disconnected.



- Use gloves and caution when freeing jammed spring.

1. Before servicing the vending machine motor, be sure to disconnect the supplier or control board from the power source.
2. When loading the product, be sure to check whether it is suitable to avoid jamming.
3. Before releasing the stuck or jammed spring, be sure to constrain the spring first.
4. When servicing the Vending machine, always wear hand and eye protection.
5. Keep hands, hair, loose clothing and tools away from moving parts at all times.
6. Service mode does not isolate the machine from electrical power and does not prevent motors, conveyor belts or the lift from operating. Certain service-mode commands intentionally start moving components.

© 2025 Quvend Ltd All rights reserved

7. Before removing, adjusting or releasing a coil, belt, motor, tray or lift component, switch off the machine, disconnect the mains plug and prevent accidental reconnection.
8. Do not carry out a motor, belt or lift test while another person is loading products, cleaning the machine or working near moving components.
9. Never reach through the delivery opening or past the delivery flap into the machine.
10. Before restoring power, make sure that all tools and loose objects have been removed and that all guards, covers, connectors and trays have been correctly reinstalled.

Vending machine Tipping

The weight of an empty Vending machine is 200-400KGS depending on type



. A falling Vending machine can cause serious injury or death. Caution should always be taken to avoid dropping or tipping a Vending machine.

1. Never rock or tip the Vending machine. It must be kept horizontal for safe operation
2. Never place the Vending machine in an inclined position such as on a ramp or with all the legs not on the same horizontal surface
3. Do not place the Vending machine in a mobile environment, for example, if it is not properly fixed in place on the ship
4. Do not place the Vending machine where it may be hit by a vehicle
5. Do not transport unsafe Vending machine, or suppliers that still contain products
6. Do not try to lift or move the Vending machine by hand. Always use equipment with appropriate load ratings. Please note that the specification weight listed is empty



FIRE HAZARD

This appliance contains the flammable refrigerant **R290**.

- Keep the ventilation openings in the appliance and its enclosure free from obstruction at all times.
- Do not damage the refrigerant circuit.
- Do not use mechanical devices or any other means to accelerate the defrosting process other than those recommended by the manufacturer.
- Do not operate electrical appliances inside the product storage compartment of the vending machine.
- Work on the refrigerant circuit may only be carried out by a certified refrigeration technician or service company.
- The vending machine must be installed in a room with a minimum floor area of **1.1 m²**.
- If the refrigerant circuit is damaged or a refrigerant leak is suspected:
    - Do not switch the machine on or off and do not operate any electrical switch in the immediate area.
    - Keep open flames, cigarettes, sparks and all other ignition sources away from the machine.
    - Ventilate the room.
    - Keep unauthorised persons away from the machine.
    - Contact a qualified

© 2025 Quvend Ltd All rights reserved

refrigeration service company authorised to work with R290.

- Do not attempt to locate a leak using a flame. Do not recharge the refrigeration system without first identifying and repairing the source of the leak.

Other Improper Conditions

Vending machine's improper use or service may cause dangerous situations.

WARNING:



- Do not use inside electrical Vending machine unless recommended by OPROO PRO

1. Always reinstall all parts removed during maintenance to their original positions
2. Do not make unauthorized changes to any part of the Vending machine
3. Always replace worn, damaged or unsuitable components
4. Do not use unauthorized parts or use parts for any purpose other than the intended use

2.3. TEST STANDARDS

▪ 2006/42/EC Machinery Directive (MD)

▪ 2014/35/EU Low Voltage Directive (LVD)

▪ 2014/30/EU Electromagnetic Compatibility Directive (EMC)

▪ 2011/65/EU RoHS Directive and (EU) 2015/863 amendment

▪ 2012/19/EU WEEE Directive

▪ 2009/125/EC Ecodesign Directive and Regulation (EU) 2019/2024

▪ Regulation (EU) 2017/1369 and Delegated Regulation (EU) 2019/2018 (Energy Labelling)

© 2025 Quvend Ltd All rights reserved

3. VENDING MACHINE SYSTEMS AND COMPONENTS

3.1. VENDING OPERATION

1. The vending system is comprised of the primary sensor, and the control logic. The primary sensors are attached to opposite ends of the hopper, and infrared light is passed between them.

2. When a selection is made, the vend motor will begin to run. After several seconds, if no product falls in the hopper (or motor returns to home position), the motor will be stopped, the credit will be maintained, and the customer will be directed to this selection with “sales paused.” customer can choose products from other selection.

3. When the controller measures a variation in the light intensity during the vend cycle, it recognizes that a product has fallen through the light into the hopper. The controller stops the vend motor (or returns to home position) and removes the credit.

4. When the Vending machine is serviced with the door open, the protective lens on the sensors can become fogged up, particularly in hot or humid locations. In these cases, the Vending machine will failed to vending until the fogging has cleared, usually within a minute after closing the door.

INFORMATION TO BE PROVIDED TO CUSTOMERS

The vending machine is sold to and operated by a professional operator. This manual is intended for the machine owner, operator, stocking personnel and authorised service technicians. It is not intended to serve as the customer-facing instructions for persons purchasing products from the machine.
The operator is responsible for ensuring that customers receive clear and sufficient information for the safe and correct use of the machine. The information may be provided on the display, through the installed payment interface or by means of labels placed on the machine.
OPROO recommends that the operator provide, as applicable:

- clear instructions for product selection and payment;
- the selling price of each product;
- information on accepted payment methods;
- instructions explaining what the customer should do if a product is not delivered;
- information on the refund procedure applicable to the installed payment system;
- the operator’s name and contact details;
- a telephone number, e-mail address or QR code for reporting a failed vend, payment problem or other fault;
- any legally required product, allergen, age-restriction or consumer information;
- a warning not to shake, tilt, strike or climb on the machine;
- a warning not to insert hands, tools or other objects beyond the delivery flap;
- a warning that children should use the machine under adult supervision where appropriate.

The operator must ensure that all customer-facing instructions remain clearly visible, legible, accurate and consistent with the actual machine configuration and the installed payment system.
Where the touchscreen or payment device already provides clear step-by-step instructions, an additional detailed operating

© 2025 Quvend Ltd All rights reserved

label is not normally necessary. However, safety warnings and operator contact information should remain available even if the display or payment system is temporarily unavailable.

3.2. CONTROL BOARD

The control board controls and monitors the Vending machine, MDB, and DEX systems. The control board is located in the back of the open Vending machine door, behind the small screen.



– risk of electric shock

WARNING –
Electrical shock and equipment damage

Opening the main door does not automatically disconnect the electrical supply. Before connecting, disconnecting or replacing control-board connectors, MDB cables, payment-system wiring or other electrical connections, switch off the machine and disconnect it from the mains supply. Verify that the affected circuits are de-energized before commencing work. Electrical connections must only be handled by authorized service personnel.

WARNING – Incorrect fuse replacement
When replacing a controller or its protective fuse, use only the manufacturer-specified fuse type, rating and characteristics. Do not install a higher-rated fuse or substitute another protective device. Before energizing the replacement controller, verify that all electrical connections and protective components are correctly installed.

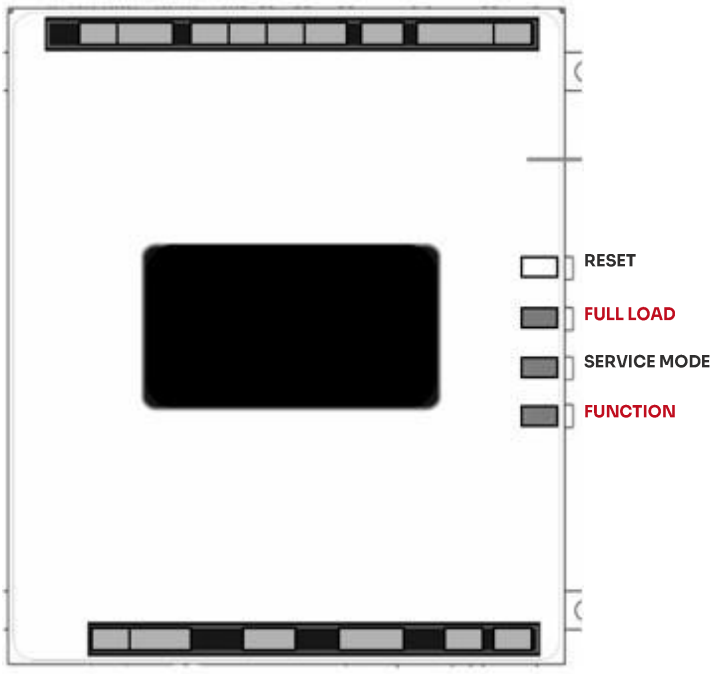

Figure 3.1 Control Board Components

Upgrading Software

The software can be upgraded by using a USB flash disk. The U disks is available at Office supply chains or on the internet. Maximum capacity of 16Gb. and the storage format need FAT32. If machine does not start the software update than 99% of cases a different USB drive is needed.

Mode Switch

Pressing the service mode button (Refer to Figure 3.1) allows the user to get into the controller's service mode to change settings, access vend data and check error codes for troubleshooting. Data is displayed on the front display panel and entered at the front selection panel. Pressing Exit on keyboard, until go back to vend mode.

DEX Jack (if customized)

The DEX jack is provided for use with external features, such as Data collection (payment method) with third party devices can also be made here.

© 2025 Quvend Ltd All rights reserved

3.3. DOOR



Finger trapping hazard

When opening or closing the main door, operate the lock only by its designated key or handle. Keep fingers away from the latch, locking mechanism, hinges and the gap between the door and cabinet. Do not force the locking mechanism. Only authorized personnel may open the main door.

3.4. VEND

SENSOR Primary

Sensor

The primary sensor is located on the right of the hopper when viewing the back of the door. The sensor, inside a protective housing, receives light from the secondary sensor. It contains circuitry to send a signal to the control board. When a product drops through the beam, it causes a change which is interpreted by the control as a successful vend. The primary sensor board also contains circuitry to the control board. When servicing the primary board, be mindful of the emitters and circuitry, these can be damaged by rough handling.

3.5. PHERIPHERIES

Validator & Debit Card Reader Locations

There are two locations that will accept bill validators and/or debit card readers. Please do not use electrical screwdriver. The maximum applicable torque is 4Nm.

Changer Location

Changer is installed in the door below the coin chute. The switch handle mate to the keyhole slots on the back of the changer.

Coin Box

The coin box is located below the changer, behind a separate door, and is used to hold overflow coins when the changer is full. It is removed by tilting slightly and lifting out.

Door Switch

The door switch is mounted on the left, middle of the door, no control uses for the door switch.

Display

The display is located on the front of the door. It serves as the interface for using and programming the machine. In service mode, it displays the active function and parameter values. In vend mode it can display the selection entered, the price of a selected item and the credit accumulated.

The number displayed top left corner Is the temperature, the signal icon is displayed top right corner shows the strength of the SIM card signal.

Keypad

The keypad is located below the display on the front of the door. A vending selection is made by keying in the number combination that corresponds to the location of an item in the machine. The keypad is also used to enter data in operation and servicing of the Vending machine.

Coin Return Switch

The coin return switch is located next to the coin slot. Stirring the coin return switch will release bent or irregular coins that are not accepted by the changer. If the machine fails to vend a selection that has been made, pressing the Change will return the full credit. If the Force Vend option is disabled, it can also return the full credit before a selection is made. If the Bill Changer option is enabled, the coin return will return change for bills inserted in the bill validator.

© 2025 Quvend Ltd All rights reserved

Lighting Options
Several time period lighting options, depending on the model and size of the Vending machine, Single or dual LED lamps.

3.6. TRAY RAILS

The rails are located inside the cabinet and are used to support the trays. The rails are adjustable up and down in 2 centimeter every step

3.7. TRAYS

Two types of motors may be used with this Vending machine. The configuration of the machine will be different if all of one or another is used, or if there is a mix. software can be used to best advantage if all motors are designed for homing, but must be similar within the same tray.
The vend motors are snapped into mounting holes on the back of each tray. The motor is driven by 24 VDC through a harness from the control board.



- Moving conveyor mechanisms Incorrect configuration or synchronization of coupled conveyor selections may cause unexpected movement, product displacement or jamming. Coupled selections must be configured according to the manufacturer's approved configuration. After adjustment, perform a functional test with hands, tools and loose clothing kept clear of moving components. Disconnect the electrical supply before correcting a jam or mechanically adjusting the conveyor system.

OPROO PRO Vend Motors
Where a dual spring motor is used, replace it with single motor and use same helices.
Use Tray Setup in Service Mode to couple the motors in each column together, causing them to turn at the same rate.
Coupled motors will always stop at the home position.

Note: When in any Mode, we can manually adjust the home position of the helices. pull forward. Bottle tray supporting plate are held in place with a screw.

3.8. ELECTRICAL BOX

The electrical (power) box is located behind the door. It's on the bottom floor of the machine.



Fire and electrical shock hazard
Never bypass, short-circuit or disable any fuse, circuit protection device or other electrical protective component. Replace defective protective devices only with manufacturer-approved components having the specified type, electrical rating and characteristics. If a protective device repeatedly operates, disconnect the machine and investigate the cause before returning it to service.

Power Switch
The power switch is located on the middle of box which is blue. The power switch is used to disconnect 230VAC power to the machine.
Above it is the temperature controller power switch which is red.

The power should be shut off when MDB devices are being connected or disconnected, when the board is being serviced, or before any wiring harness is connected to or disconnected from the control board or sensors.

Transformer
The transformer reduces the input voltage to 24 volts AC for the control board. Lighting and window heater.

© 2025 Quvend Ltd All rights reserved

RFI Filter
The filter removes electrical noise from the power supplied to the 24VAC transformer to prevent interference with operation of the control board and software.

Springs
There are dozens sizes of springs available. There are several pitches available in each size, and is determined by counting the number of product openings in the spring (Confirmation on order).

Dividers
The dividers separate product columns on the tray. On snack trays, 2 horizontal slots in the divider allow for the installation of a candy pusher. To remove the divider, push rearward and lift. To install, insert the rear tab in the desired slot, push rearward and then down. Make sure the locking tabs.

Relay
AMS relays use a 24 VDC signal from the control board to close the relay and supply power to the refrigeration unit or other accessories.

On the bottom have engaged their respective slots and control board to close the relay and supply power to the refrigeration unit or other accessories.

Power Distribution Harness
The power distribution harness splits the incoming power into individual leads for the high voltage components.

Ground Attachment
The Vending machine electrical ground is made through the use of grounding studs or screws at the lower back wall of the machine. Earth ground and individual ground wires from the high voltage components are attached in power box, and should always be replaced after service or repair. VENDING MACHINE PREPARATION AND INSTALLATION



– Protective earthing

Removal or replacement of the electrical box may disturb the protective earth connection. Before returning the machine to service, ensure that all protective earth conductors and connections have been correctly reinstalled and securely fastened. Protective earth continuity must be verified by qualified service personnel. Never operate the machine with a missing, loose or damaged protective earth connection.

© 2025 Quvend Ltd All rights reserved

4. VENDING MACHINE PREPARATION AND INSTALLATION

4.1. INSTALLATION GUIDE - FIRST STEPS

1. After receiving the machine, check whether the packing is in good condition first. If there is any damage, please consult with the logistics and call our company directly.
2. Please remove all packaging components such as wood board, protective film, foam and cable tie before use.
3. Place the machine in your business position, it must be dry, well ventilated, keep away from heat, keep away from rain, sunshine, avoid low temperature, avoid water splash, solid and stable ground,20cm above the wall.
4. After the machine is placed, let the machine stand for more than 30 minutes, then turn on the power to ensure the normal operation of the machine. To turn on the cooling, the machine should be allowed to stand for 4-5 hours to open, otherwise it will affect the compressor.

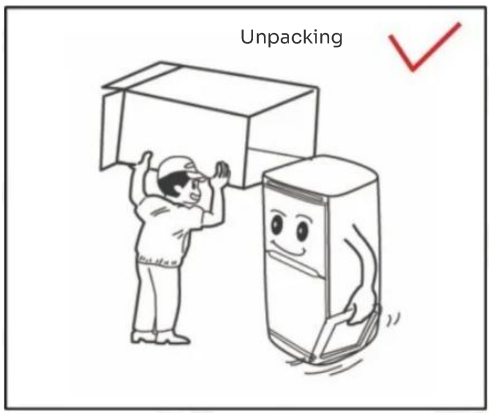





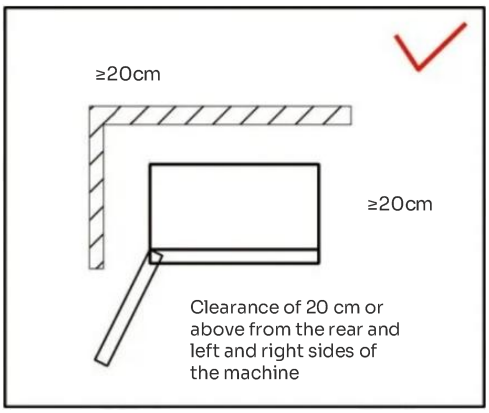

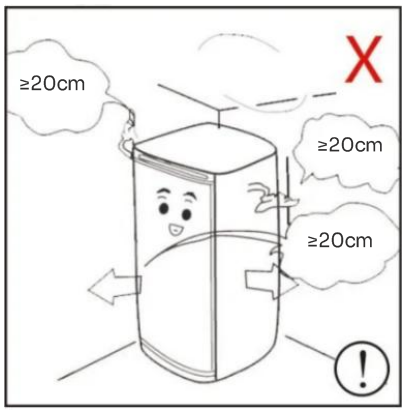

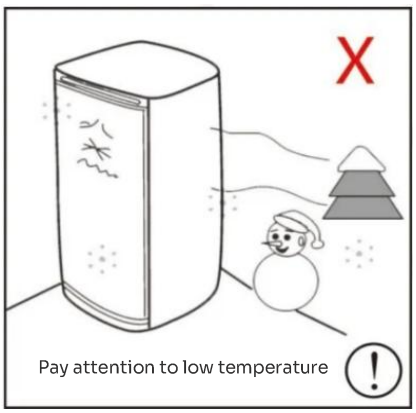



ALARM

The power supply of vending machine must be grounded! Ungrounded machine can not be used! Otherwise, there are serious security risks!

Setting up a Vending machine has been divided into three stages. Step 4.1 confirms power and site suitability. Step 4.2 includes preparations accomplished in the shop. Step 4.3 is accomplished on-site, where the Vending machine is to be located.



– Risk of crushing during transportation The vending machine is heavy and may cause serious injury if it overturns during transportation. Use handling equipment suitable for the total machine weight. Keep the machine upright and secured against uncontrolled movement. Take particular care when crossing thresholds, ramps and uneven surfaces. Keep all persons clear of the potential tipping and crushing zones. Transportation must be carried out by trained personnel.

CAUTION – Insufficient ventilation clearance Position the vending machine so that the rear ventilation openings remain unobstructed and adequate airflow is maintained. Do not position the machine directly against a wall where this would block the ventilation path. Follow the minimum clearances specified in the installation instructions and check that the ventilation openings remain clear after installation.

4.2. CONFIRMING POWER AT OUTLET

NEVER USE AN EXTENSION CORD WITH THE VENDING MACHINE.

Checking the Outlet

Consult a qualified electrician to check the outlet for proper polarity, voltage, and grounding. Check the serial plate on the side of the door to confirm the Vending machine is rated for the outlet voltage.

Electrical Service Requirement for CE Compliance

The following requirement applies only to models using ½ HP compressors and displaying the CE mark on the serial plate. If this requirement applies to your Vending machine, you will find a similarly worded decal on the back of the Vending machine near the power cord.

ELECTRICAL SERVICE REQUIREMENT FOR CE COMPLIANCE:

THIS EQUIPMENT IS INTENDED FOR USE ONLY IN PREMISES HAVING A SERVICE CURRENT CAPACITY OF AT LEAST 8A PER PHASE, SUPPLIED FROM A DISTRIBUTION NETWORK HAVING A NOMINAL VOLTAGE OF 230V. THE USER SHOULD DETERMINE IN CONSULTATION WITH THE SUPPLY AUTHORITY, IF NECESSARY, THAT THE SERVICE CURRENT CAPACITY AT THE INTERFACE POINT IS SUFFICIENT FOR THIS EQUIPMENT.



– Incorrect electrical supply

Before connecting the vending machine to the electrical supply, verify that the supply voltage and frequency correspond to the values stated on the machine rating plate. The machine must be connected to a properly grounded electrical installation. Do not connect the machine if the electrical supply does not meet the specified requirements. Electrical installation and verification must be performed by qualified personnel.

4.3. VENDING MACHINE PREPARATION

Inspection of damage prior to signing the carrier's delivery receipt. Check for dents on the top or sides of the Vending machine, bent legs, broken glass, or other damage on the exterior of the machine. Check the interior for comp Contents that may have been knocked loose or other damage.

Mounting and Connecting Bill Validators and Card Readers

© 2025 QuVend Ltd All rights reserved

The OPROO PRO will support any NAMA-approved Multi-Drop Bus (MDB) bill validator or card reader. Please read the device manufacturer's literature before proceeding.

1. Always disconnect power to the control board before servicing.
2. On the inside of the right mount door, are (2) metal plates, each fastened to a set of (4) threaded mounting studs which correspond to the mounting holes in the bill validator. Either set of mounting studs may be used for a bill validator or card reader. The lower mounting position is ADA approved for consumers with disabilities.
3. Remove the four nuts and spacer that retain the steel cover panel. Remove the steel cover panel.
4. Refer to the manufacturer's literature for instructions on accessing the mounting holes in your device. Place the mounting holes over the threaded studs and reinstall the nuts. Some devices may require spacers.
5. Connect the wiring harness to the MDB harness from the control board. If two devices are installed, connect the second device to the validator.
6. If a coin mechanism has been previously installed, disconnect it from the control board MDB harness and connect it to the validator or second device if installed.
7. Reconnect power to the control board.

Mounting and Connecting Coin Mechanism (Changer)

The OPROO PRO will support any NAMA-approved Multi-Drop Bus (MDB) Coin Mechanism. On some export models, the Mars-type Executive Mechanism is supported. Please read the coin mechanism manufacturer's literature before proceeding.

1. Always disconnect power to the control board before servicing.
2. On the inside of the right door, below the coin chute, (3) screws which correspond to slots on the back of the changer. Do not adjust these screws.
3. Install the changer by placing the large round opening at the bottom of each slot over a screw head. Be careful to hold the wiring harnesses in this area out of the way. Once each of the round openings are over the screw heads, the changer is lowered to engage the narrow portion of the slot with the shank of each screw.
4. Tighten the mounting screws (reference manufacturer's literature).
5. Connect the wiring harness to the bill validator (if applicable) or to the MDB connector from the control board.
6. Adjust the orange plastic coin chute as required to align the chute with the changer.
7. Reconnect power to the control board.

Testing Motors

The vend motors MUST BE TESTED after any changes in the arrangement, type, or number of motors have been made.

1. Press the service mode switch on the control board (Refer to Figure 3.1).
2. Press 888888 go to setting interface Using the 6 or 8key, scroll through the menu to "Selection test".
3. Enter selection number to test the motor. Motor is moved a circle and back to the home position.
4. Watch the display for missing motors that should be connected. The Vending machine will not vend from a given spring when the motor is missing, jammed or has home switch problems.
5. After the motors have been tested, check to make sure all the helices are in the home position. If the end of a spring is not at its right position in the column, pull it out of the motor (within motor spring force), turn it until it is, and release the spring into the motor.

Product Loading Test

Before putting the Vending machine on location, it is a good idea to determine the placement of products on the trays.

1. Remove the cardboard spacers and ties securing the trays.
2. Make use of Section 5.3 for tray vertical

© 2025 QuVend Ltd All rights reserved

adjustments and Section 5.4 for tray column configuration when configuring your Vending machine to suit your product.

3. Make sure the product can slide in and out of the spring easily. If the product is too snug, it may cause the spring to jam during vending. Place it in a spring with a larger opening.
4. Likewise, if the product is too loose in the spring, it may not vend properly. Use a spring with the smallest opening that will allow the product to slide in and out freely (Refer to Sections 1.4, and 5.5 through 5.9).
5. Make sure there is adequate clearance between the tops of the packages and the trays above when sliding the trays in and out, and when the product is being vended.
6. This is also a good time to set the end position of the spring to make sure the first product is held securely in the spring. To do this, vend a product from each column. The control stops the spring the instant the sensor detects a product falling in the hopper. The end position of the spring will automatically be set to the correct position when a product is vended.
7. If desired, the position can be set manually by pulling the spring out of the motor, rotating it, and releasing it will automatic recovery in the motor.

Installing Price Labels (Factory installed)

After determining the product placement, install the price labels. The labels are shipped in the envelope with this manual.

1. Insert the bottom edge of the label in the lower groove of the extrusion on the front of the tray.

2. Carefully press in on the label until it bows enough to snap into the top groove of the extrusion.

Setting Prices

After product placement and installation of the price labels, set the prices into the Vending machine.

1. To enter the service mode, press the yellow button on the control board (Refer to Figure 3.1, 3rd button).
2. Using the 6 or 8 keys, scroll through the menu to “PRICE SETTINGS”.
3. Press Enter. Choose selection price (one of three)
   3.1. Choose selection price for one selection
   3.2. Choose tray price for one tray.
   3.3. Choose entire machine price is for the each Vending machine selection at this price.
4. Enter the selection number for which you want to set the price (example: 12).
5. Press 1&2 to edit or change the price.
6. Press ENTER to save this price.
7. The prices as set will be maintained by the Vending machine even if there is a power failure or if the machine is unplugged: however, prices will need to be reset if the program chip is changed or if the configuration of motors or trays is changed.
8. Using the EXIT keys, exit the service mode.

ON-SITE INSTALLATION



– Unsuitable installation environmentDo not install the vending machine adjacent to heaters, radiators, ovens or other significant heat sources, or in locations exposed to direct sunlight. Excessive ambient heat may impair refrigeration performance and increase the temperature of internal components. Install the machine only within the operating environmental conditions specified in this manual.

Remove the Shipping Boards

1. Split the shipping boards by inserting a crowbar or wedge into the slots at either

© 2025 QuVend Ltd All rights reserved

end.
2. If necessary, lift the Vending machine to remove the broken boards using properly rated equipment. Do not tilt the Vending machine. Do not attempt to lift the Vending machine with a 2-wheel hand truck.

Placing the Vending machine in Location

1. Place the Vending machine within 1,5 meter of the designated power outlet. The power outlet should be accessible when the Vending machine is in position, and the ventilation opening in the back of the Vending machine must be clear of obstructions.
2. For refrigerated models, allow at least 20 cm between the wall and the back of the Vending machine for air circulation.
3. Make sure the Vending machine does not block walkways or exits.
4. Do not place the Vending machine in a location where it can be struck by vehicles.
5. Leave at least 20cm between a wall and the hinge side of the Vending machine to prevent the door hitting the wall when opened or use a protective wall bumper. The door must open wide enough to allow the trays to be pulled out.
6. Leave at least 10cm below the bottom floor of the vending machine (do not remove legs) and coolers fan has a vetillation az the bottom of the machine.
7. The Vending machine is designed to meet ADA guidelines for persons in wheelchairs using a parallel approach (side of wheelchair adjacent to front of Vending machine). Make sure there is adequate room to maneuver a wheelchair into this position in front of the Vending machine.

Leveling the Vending machine

For safe operation the Vending machine must be level.

1. On the bottom of the Vending machine are four (4) threaded leveling legs located at the corners of the cabinet. Before beginning, be sure that all four leveling legs are screwed in completely. Minimum ground clearance to be used is 10cm
2. With the door closed and locked, check the four main legs and adjust any leg that is not contacting the floor. Make sure the support screw under the door is all the way up and is not contacting the floor at this time.
3. Repeat the two steps to level the Vending machine front-to-back.
4. After the Vending machine is level, adjust the support screw under the door until it contacts the floor.



– FIRE HAZARD:

This appliance contains the flammable refrigerant **R290**.

- Keep the ventilation openings in the appliance and its enclosure free from obstruction at all times.
- Do not damage the refrigerant circuit.
- Do not use mechanical devices or any other means to accelerate the defrosting process other than those recommended by the manufacturer.
- Do not operate electrical appliances inside the product storage compartment of the vending machine.
- Work on the refrigerant circuit may only be carried out by a certified refrigeration technician or service company.
- The vending machine must be installed in a room with a minimum floor area of **1.1 m²**.



– Ventilation openings

Keep all ventilation openings in the vending machine enclosure unobstructed. Do not cover ventilation grilles or block the airflow required for cooling and refrigeration. Maintain the

© 2025 QuVend Ltd All rights reserved

installation clearances specified in this manual. Restricted airflow may cause overheating, refrigeration malfunction or increased fire risk.

4.4. FOOD SAFETY AND MERCHANDISING

IThe operator is responsible for ensuring that all products loaded into the machine are suitable for vending and are stored in accordance with the product manufacturer's requirements and all applicable food safety regulations.
Before loading products:

1. Wash and dry your hands or wear clean protective gloves where required by the applicable hygiene procedure.
2. Check that the product packaging is clean, intact, securely closed and free from leakage or contamination.
3. Check the expiry date, use-by date or best-before date of every product.
4. Do not load expired products or products with damaged, swollen, leaking, open or contaminated packaging.
5. Confirm that the required storage temperature of the product is compatible with the actual temperature setting and performance of the machine.
6. Do not load a product that is too large, too heavy or unstable for the selected tray or delivery mechanism.

When loading refrigerated products:

- maintain the cold chain at all times;
- make sure the machine has reached the required operating temperature before loading temperature-sensitive products;
- keep the machine door open for the shortest possible time;
- load products promptly and close the door completely after loading;
- verify that the displayed temperature returns to the permitted range;
- remove or transfer temperature-sensitive products if the machine cannot maintain the required storage temperature.

Products shall be rotated using the first-expiring-first-out principle. Products with the earliest expiry date shall be placed in the position from which they will be dispensed first.
After loading a new product type, perform at least one test vend from the relevant selection. Verify that the product moves freely, is delivered without damage and does not obstruct the tray, coil, belt, lift or delivery compartment.

© 2025 QuVend Ltd All rights reserved

TOOLS REQUIRED:
construction wrench

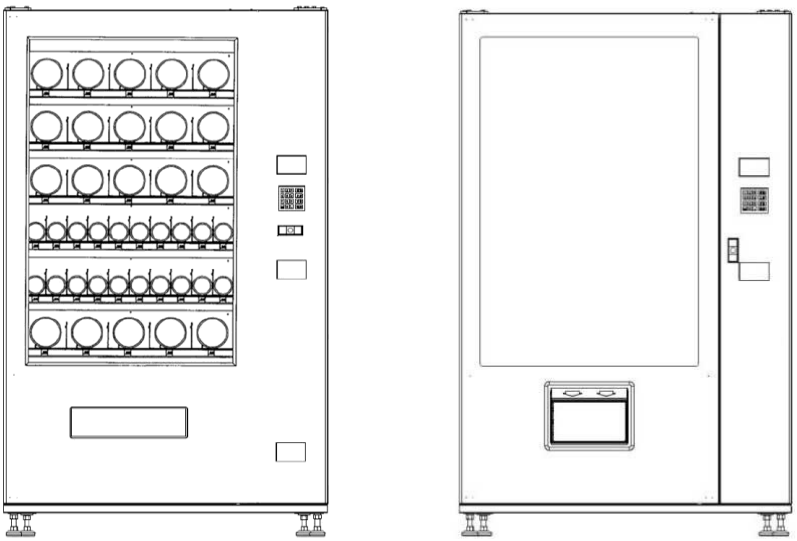

Figure 4.1 Leveling the Vending machine



Always wear gloves and eye protection when servicing

© 2025 QuVend Ltd All rights reserved

5. VENDING MACHINE SAFETY PRECAUTIONS

1. Use minimum AC 220V/50Hz/10A power supply. If the voltage fluctuation range exceeds 200~240V, which may cause machine failure.



2. A reliable three-hole socket with grounding must be used, otherwise there is danger of electric shock. After the machine is installed in place, the plug should be easily accessible.



3. Do not damage the power cord.
a. Be sure to hold the plug tightly (do not pull the power cord directly), pull out directly from the socket.
b. Do not let the machine press on the power cord or manually step on the power cord.
c. When moving the machine away from the wall, be careful not to crush or damage the power cord.
d. When the power cord is damaged or the plug is worn out, in order to avoid danger, do not continue to use the machine. It must be replaced by a professional by the manufacturer, the maintenance department or the like.



4. When cleaning, repairing or replacing the machine parts, please unplug the power cord to prevent electric shock.



5. It is strictly forbidden to dismantle and modify the machine privately. The maintenance machine must be carried out by professionals.



6. Push the door of the pickup slot with one hand and put another hand into the pick-up box to pick up the goods. The pick-up door is heavy. Be careful not to clamp the hands. When the children need to use it, the help of adults is necessary.



© 2025 QuVend Ltd All rights reserved

6. TRAY CONFIGURATION AND ADJUSTMENT

The trays in the supplier are highly configurable. In fact, any combination of wide and narrow columns can be provided on the tray. Before changing the configuration of the pallet, make sure to order the parts you need, such as a new spring, divider or additional motor.

6.1. Tray installation

Pick up the tray horizontally, align the left and right pulleys with the slide rails, and push the pulleys into the slide rails until the tray is fully pushed in. There are raised parts on the left and right sides of the front of the tray to prevent the tray from falling out automatically. Finally, plug in the selection cable, and the installation is complete.

6.2. Tray removal

First disconnect the selection cable on the right side, take out the tray horizontally, and complete the removal.

6.3. Coil Tray

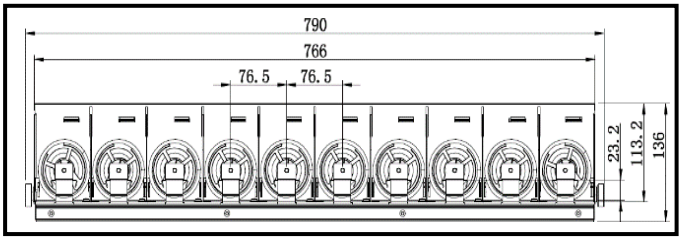

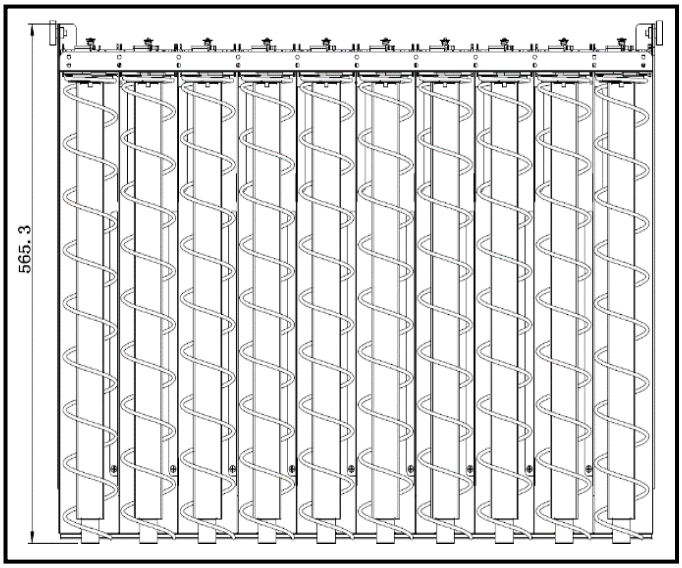

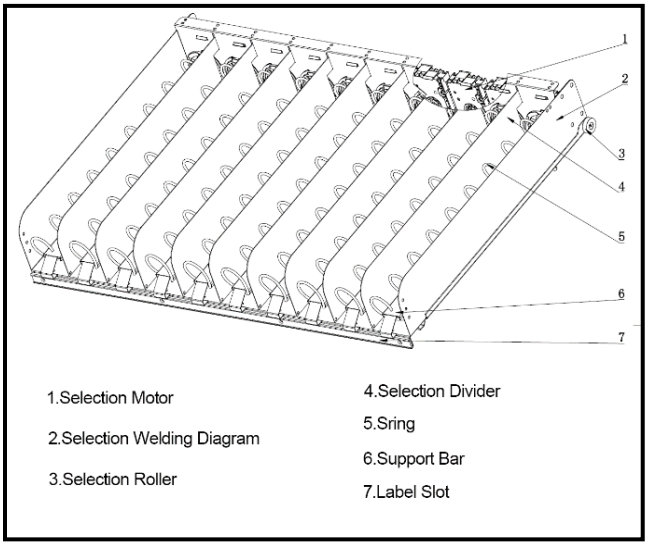

Figure 6.1 Coil Tray

1. Change divider

1. To remove, first remove the screws of the divider, and then pick it up from the front, you can take out the divider.
2. Reverse the disassembly process to reinstall.

2. Change spring

1. Each spring has a adapter, and the spring is stuck on the adapter. To remove the spring from the adapter, first pull the spring directly out, rotate it counterclockwise, and take out the spring.
2. Reverse the disassembly process to reinstall.

3. Change adapter

1. Hold down the two long clips on the adapter, and then remove.
2. Reverse the disassembly process to reinstall.

4. Change motor

1. Push out the clip on the front of the motor, then take out the motor, and unplug the motor wire.
2. Reverse the disassembly process to reinstall.

© 2025 QuVend Ltd All rights reserved

5. Change support bar

1. Loosen the screw at the front end of the support bar, and then take out the support bar.
2. Reverse the disassembly process to reinstall.

6.4. Product placement

1. Without support bar: Tilt the product backward and put it in the gap of the spring.
2. With support bar: The product is placed vertically in the gap of the spring.

CAUTION –

Ergonomic hazards during replenishment
Repeated bending, reaching or lifting during product replenishment may cause musculoskeletal injury. Use safe lifting techniques, avoid twisting while carrying products and do not overload trays. For products placed above comfortable working height, use a suitable stable access platform. Do not stand on the vending machine, its trays or other internal components.

6.5. Spring selection coupling

Single spiral positions can be coupled to form a double spiral position for handling larger workpieces. To do this, combine a right-hand spiral with a left-hand spiral, mount the output motor in the correct orientation, and then configure the coupling in the menu. Single spiral positions can only be coupled in pairs.

CAUTION –

Incorrect conveyor coupling
Do not exceed the maximum number of coupled selections permitted by the manufacturer. Coupling beyond the approved configuration may cause malfunction, product jamming or unexpected movement. Following any configuration change, verify the correct operation of each affected selection before returning the machine to service.

6.6. Conveyor Tray

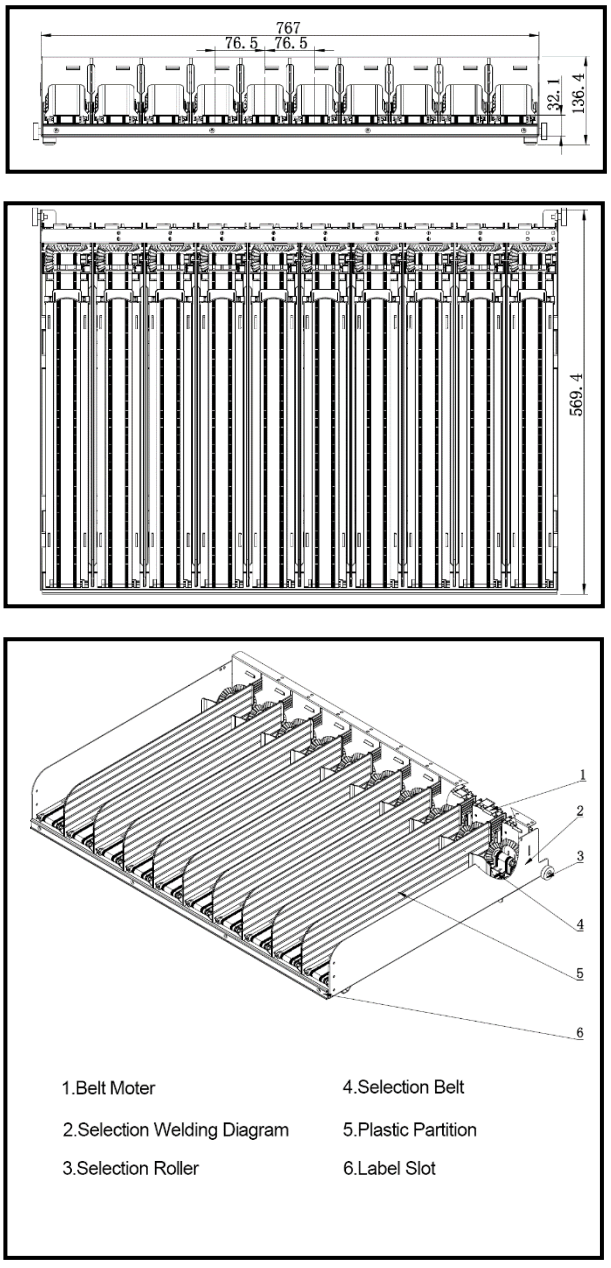

Figure 6.2 Conveyor Tray

6.7. Difference from coil tray

1. The method of replacing the motor,

© 2025 QuVend Ltd All rights reserved

divider, and adapter is similar to that of the coil tray.

2. Change Belt: There are 4 clips at the bottom of the belt to fix it on the tray. Loosen the 4 clips to take out the belt.
3. Product placement: The product is placed vertically on the belt and must be able to be placed on the belt steadily, otherwise the product will fall down with the movement of the belt.
4. Belt selection coupling: The method is the same as that of the spring, but the belt selection can be coupled in multiples, and no more than 5 selections can be coupled, which can place super-large products.

© 2025 QuVend Ltd All rights reserved

7. SERVICE PROGRAMMING

7.1. Service Model

Press the yellow mode button on the control board to enter the service mode (see Figure 3.1), There are two menus, one is the basic menu, the password is 888888, and the other is the super menu, the password is 125808521, Press the 2468 key to indicate down, left, and up, as well as cancel and confirm key.

7.2. Basic Menu (888888)

7.2.1. General Setting

1. Bill Change -Test banknote change.
2. Price Setting - Set the price of a single selection, each layer, or the whole machine.
3. Inventory Setting - Set the inventory of a single selection, each layer, or the whole machine. To disable inventory count (set infinite stock) set: 255.
4. Selection Test - Test whether the motor of a single selection is operating normally.
5. Light Control - Set the light working time, only set the master machine.

7.2.2. Payment System

1. WeChat - Turn on this option to use the WeChat function.
2. Alipay - Turn on this option to use the Alipay function
3. UnionPay/Pos - Connect card reader function need to turn this option.
4. Bill - Set the money-receiving mode of the banknote device, set the maximum denomination of the banknote device, and test bill change.
5. Coin - Query and set the number of coins, test coin change.

7.2.3. Selection Management

1. Selection Numbers - Detecting the number of machine selections.
2. Drop Sensor Detecting - Turn the drop sensor on or off.
3. Selection Configuration - Check selection Information.
4. Selection Item ID - Correspondence between selection and product code.
5. Selection Test - Test a single selection.
6. Selection Cycle Test - Automatically test the first to last selection.
7. Belt Detecting Set - The movement time of the belt cargo lane includes timeout time and stop time. The timeout time refers to the belt movement time before the product is detected (default 6000), and the stop time refers to the belt movement time after the product is detected (The default is 0, if the bottom area of the product is large, you need to set it).
8. Extra 1/4 turn setting - When the goods are jammed, the motor rotates more than 1/4 circle setting.
9. Selection Capacity - Set the selection capacity of a single, each layer, or the whole machine, the capacity must be greater than the inventory number.
10. Jammed Motor Solution - Can continue to purchase after setting up the selection jammed.

7.2.4. Sales Statistics

1. Daily Sales - Query the sales records of the day, press the left and right keys to switch the date.
2. Monthly Sales - Query the sales records of the current month, press the left and right keys to switch the month.
3. Yearly Sales - Query the sales records of the current year, press the left and right keys to switch the year.
4. Entire Machine Sales - Query all transaction records, it will display the total amount, the total number of products, and the number of transactions of the payment type.
5. Selection Sales Message - Enter the selection number to query the sales records of a single selection.
6. Clear Sales Message - Clear all sales records.

© 2025 QuVend Ltd All rights reserved

WARNING! In some countries, sales data is subject to statutory retention requirements. Back up the data before deleting it and check the regulations applicable in your location.

7. Clear Security Code – Set a password for clearing records.
8. Initial Remote System – Clear invalid data in the motherboard.

7.2.5. System Setting

1. User Menu Password – Set user menu password.
2. System Time – Set the motherboard system time and date.
3. Volume Setting – Set the voice level of the voice broadcast, the range is 0-200.
4. Temperature Controller Setting – Set the on and off of the temperature controller, set the mode of the temperature controller, cooling mode, heating mode, constant temperature mode, and set the temperature value.

   The temperature setting must be selected according to the storage requirements of the products placed in the machine. The temperature shown on the display represents the measured air temperature and may differ temporarily from the temperature of the products, particularly after the door has been opened or products have been loaded. Changing a temperature parameter does not guarantee that the machine is suitable for every type of perishable food. The operator must verify and document that the required product temperature is achieved and maintained under the actual installation and loading conditions. If the internal temperature remains outside the permitted product storage range, the affected temperature-sensitive products must not be sold.

5. Temperature Controller Staus – Query the status of the temperature controller, such as: the temperature controller is normal, the temperature controller connection fails, the compressor is disconnected, etc.
6. Compressor Working Period – Set the compressor working time period, 3 time periods can be set, such as: 10-16, Indicates that the compressor is on from 10:00 to 16:00, and the compressor is off at other times.
7. Query Driver Board Information – If the machine is connected to other slave machine, you can query the program version of the slave machine drive board.

7.2.6. Fault Diagnosis

1. Drop Sensor Test – To test whether the drop sensor is normal, there are automatic and manual tests. During manual testing, you need to shift the sensor with your hands or objects. The automatic test and manual test are both successful to be considered normal.
2. Apply License – When the machine shows that the service is suspended, you need to enter this menu. The customer provides us with a random code, and we give a verification code to the customer. After inputting, press confirm button.
3. Bill Validator Diagnosis – Query whether the bill validator is in normal state and whether it is connected to the main board.
4. Coin Mechanism Diagnosis – Query whether the coin mechanism is in normal state and whether it is connected to the main board.
5. VMC Error Clear – Clear the error message on the motherboard.
6. Clear Jammed Selection – If there is a item jam fault in the selection, it will be displayed in this option, and the selection can work normally after clearing.
7. Clear Motor Error – Sometimes the motor will be abnormal after the goods are jammed, and the motor will malfunction. You need to clear the fault information here to work normally.
8. Clear Extra Turn Error – If you turn on the function of 1/4 turn of the jam, and then the jam fault occurs, you need to clear it

© 2025 QuVend Ltd All rights reserved

here, otherwise the position of the spring will change, which will affect products vend.
9. Selection Check - Check whether the selection is normal.
10. Network Diagnosis - Check whether the machine is networked and the signal value of the network.

7.3. Super Menu (125808521)

7.3.1. Payment System

1. Coin System Set - Choose the right coin system, coin or hopper coin. Generally choose “coin”.
2. Export System Config - The configuration information of this machine can be output to USB drive, such as price, selection information, etc.
3. Import System Config - After exporting the configuration on the machine to a USB flash drive, insert the USB flash drive into another machine and import it, you can synchronize the configuration on the machine.
4. Set Logo - You can choose to display or not display the company LOGO.

7.3.2. Selection Management

1. Selection Mode - Three modes can be selected, spiral mode, conveyor belt mode, hook mode, Choose which mode the machine actually uses.
2. Selection Capacity - Same as 6.2.3.9
3. Motor AD - Motor threshold, the critical value of motor rotation, default is 150.
4. Selection Coupling - Two or more single selection are coupled to make it possible to place large commodities. First select the first selection that needs to be coupled, and then select the coupling quantity, such as: 011 and 012 coupling, enter 011 first, and then enter 2, it is ok.
5. Clear Selection Coupling - Clear the coupling of all settings on the machine.
6. Coupling Synchronization Time - When the spring selection is coupled, the two selection motors will not run synchronously, and a synchronization time needs to be set, the default is 1200.
7. Set Motor Short Value - When the motor reaches a certain value, the main board will display that the motor is short-circuited, the range is 700-900, and the default is 820.

7.3.3. System Setting

1. Machine ID - Machine code, each machine has an independent code, 10 digits, set in this menu.
2. Device Language - The menu language can be changed, Chinese, English and German are supported.
3. User Menu Password - Same as 6.2.5.1
4. System Time - Same as 6.2.5.2
5. Delivery Door Close Time - The delivery of the machine with elevator is automatically opened and closed, and enough time can be set to pick up the goods, the default is 60S.
6. Connecting Upper Computer - If the machine is connected to an Android system, you need to select Yes in this option, and the default option is No.
7. Connecting Lift - If the machine has a lifting system, you need to select Yes in this option, and the default option is No.
8. Drop Sensor Frequency Adjustment - Adjust the frequency of the drop sensor, automatic adjustment, only used for machines with lifting system.
9. Drop Sensor Sensitivity - Adjust the sensitivity of the drop sensor, the range is 15-30, the lower the value, the more sensitive it is, only used for machines with lifting systems.

7.3.4. Fault Diagnosis

1. Drop Sensor Test - Same as 6.2.6.1
2. Apply License - Same as 6.2.6.2
3. Bill Validator Diagnosis - Same as 6.2.6.3
4. Coin Mechanism Diagnosis - Same as 6.2.6.4
5. Clear Jammed Selection - Same as 6.2.6.6
6. Clear Motor Error - Same as 6.2.6.7
7. Clear Lift Error- The number of lift failures will be displayed. The lift cannot

© 2025 QuVend Ltd All rights reserved

be used for more than 3 times, and the error needs to be cleared here.

8. Connecting Temperature Controller – The temperature and parameters can be set through the menu after the temperature controller is connected to the main board. This option can choose whether to connect or not. The default is yes.
9. Temperature Controller Parameter - Temperature controller parameter settings, such as: temperature lower limit, temperature lower limit, defrost cycle, defrost time, etc.
10. DTU Initialization - DTU is a networking module, sometimes DTU may not be able to communicate with the main board normally, and DTU needs to be initialized at this time.
11. Restore Factory - Restore the factory settings of the motherboard, and then need to reset the parameters, etc.

7.3.5. Lift System

1. Lift layer-location-Manually locate the lift and stay at each layer. When the positioning is started, the lift will rise slowly, press the ENTER button and the lift will stop. After pressing the ENTER button, the lift will go down and the positioning is completed.
2. Lift speed-Adjust the rising and falling speed of the elevator. Range 0-50. Default 25.
3. Lift test-Test whether the lift rises and falls normally.
4. Lift sensitivity-Set the lift sensitivity, Default value 3-5.
5. Anti-theft board close time-Set the automatic closing time of the anti-theft board, the default value is 60S.

7.4. Boot interface information

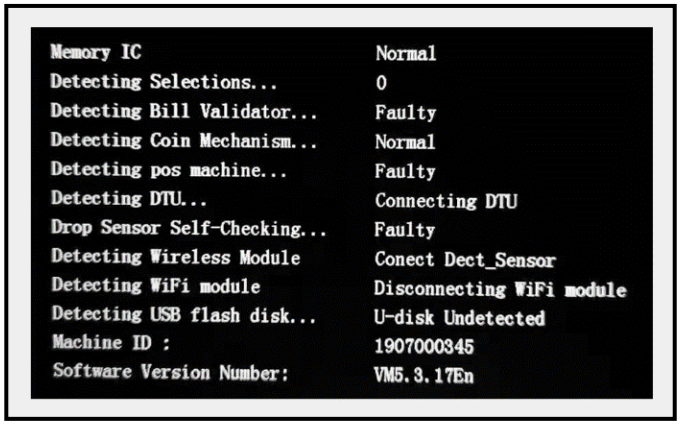

Figure 7.1 Boot interface

1. Check whether the main chip is normal.
2. Check the number of selection.
3. Check the status of the bill validator、coin mechanism and pos machine.
4. Check the status of the DTU drop sensor.
5. Check whether the USB flash drive is inserted.
6. Check machine code.
7. Check the version of the main board program.

© 2025 QuVend Ltd All rights reserved

8. TEMPERATURE CONTROLLER MANUAL

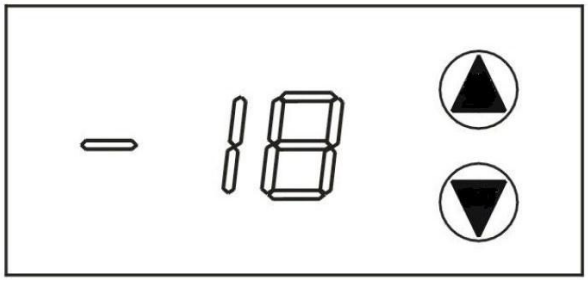

A. Specifications

Rated voltage	DC: 24V
Display temperature range	-35℃ -60℃
Circuit board size (length X width X height)	95x77x21
Refrigeration relay contact current	30A
Evaporation fan relay contact current	10A
PTC relay contact current	10A

B. Control parameters

Parameter code	Parameter name	Adjustable range	Factory default
E1	Control temperature lower limit	-35～E2℃	2℃
E2	Control temperature upper limit	E1～60℃	40℃
E3	Return difference temperature	1～8℃	5℃
E4	Delay start time	0～8Min	2Min
E5	Sensor temperature adjustment	-10～10℃	-2℃
E6	Defrost cycle	0～24H	6H
E7	Defrost time	1～40Min	5Min

© 2025 QuVend Ltd All rights reserved

E8	Working mode	0 Close 1 Open Refrigeration, heating, constant temperature	Refrigeration
E9	Communication address	0 Master, 1-5 Slave	0(Master)

- When the stop defrost cycle E6 is set to 0, the automatic frost function is cancelled.
- Fan control: Fan and compressor work together.
- Communication address: Master machine 0xFC, Slave machine A1-A5.

C. Panel display instructions

1. Refrigeration indication: During the refrigeration process, the panel alternately displays the current machine temperature and refrigeration status “COL”
2. Defrosting indicator: During the defrosting process, the panel alternately displays the machine temperature and “**FAN**” status display during defrosting
3. Heating indicator: During the heating process, the panel alternately displays the current machine temperature and heating status “HHH”
4. Constant temperature indicator: During the constant temperature process, the panel alternately displays the current machine temperature and status “**CUH**”
5. Setting control temperature: Press and hold the ▲ button for 10-12 seconds, then release the button to display the control temperature, enter the setting control temperature flashes, and then press ▲ or ▼ to modify the control temperature. If you do not press any button for 4 seconds, it will return to the display of the machine temperature.
6. Inquire and set the parameters (Note: The control parameters are set by the factory, if the user has no special needs, please do not modify the parameters!).

(1) Inquire parameters: Press and hold the ▼ button for 10-12 seconds and release the button to enter the automatic sequential patrol display mode, which is convenient for viewing the displayed parameter code and parameter value status: (At this time, only the parameters can be observed, not modified).

(2) Setting parameters: Long press the ▼ button for 20 seconds and release the button to enter the state of displaying the parameter code and parameter value. At this time, when the parameter value is displayed, press the ▲ or ▼ button to modify the corresponding parameter value. If you need to return to the last parameter, you need to wait for the current setting to be displayed and then press the key again to enter the setting parameter state.

(3) To set the temperature controller to turn on the current protection and whether to enable the temperature controller setting, you need to connect a new motherboard and set the parameter to adjust the value to 1 to turn on the current protection. The default is to turn on the current protection and turn on the temperature controller.

© 2025 QuVend Ltd All rights reserved

D. Fault Diagnosis

1. When the sensor is higher than 60℃, it will display "HH".
2. When the sensor is disconnected or the senesor temperature is lower than -35℃, it will display "LL".
3. Error code display value

EA1	Compressor current is too large (>5A)
EA2	Compressor open circuit (0A)
EA3	Evaporating fan current is too large (>0.72A)
EA4	Evaporator fan open circuit (0A)
EA5	Cooling fan current is too large (>0.54A)
EA6	Cooling fan open circuit (0A)
E0	The temperature drops or rises too slowly

Note :

1. When an error code (EA1-EA6) appears, the panel displays the machine temperature and the error code will be displayed at an interval of about 20 seconds.
2. E0 Error Prompt: Indicates that in the cooling mode, the user is prompted to clean the filter or leak fluorine when the temperature is too slow. The compressor will continue to work, and the heating status indicates that the temperature rise is too slow, and the circuit or PTC needs to be checked.

© 2025 QuVend Ltd All rights reserved

9. TROUBLESHOOTING

9.1. Out Of Service

Some errors will disable the Vending machine. When this happens, an "out of service" message will be displayed.
To allow the Vending machine to use it again, you need to press the yellow menu button on the motherboard. In the fault diagnosis, find Apply License, enter the verification code and press the confirm button, then the machine is working.

9.2. Machine Error Display

Error Display	Error Reason	Solution
Out of stock	No inventory quantity is set in the motherboard	Set the inventory number in the menu, refer to 7.2.1.3.
Pause to purchase	There is a selection jammed failure	Clear the jammed fault or motor fault, refer to 7.2.6.6 or 7.2.6.7.
The motor does not exist	The motor is damaged or the motor wire is not connected properly	Change the motor or reconnect the cable
Machine memory error	Machine data storage abnormal	Set in the menu, 7.2.4.8, password 888888
Up computer Communication error	Unused functions are turned on in the menu	Set in the menu, 7.3.3.6, choose "No", then power off restart machine
Delivery door is not closed	Unused functions are turned on in the menu	Set in the menu, 7.3.3.7, choose No, then power off restart machine
Please take out item	Products on the lifting platform	Check if there are products on the lifting platform, If there is, please take it out, if not,set in the menu 7.3.3.8 and 7.3.3.9 (set 108)
Lift error	There have been more than 3 lift failures	Set in the menu, 7.3.4.7,clear lift error
Lift self-check error	The lifting platform is not in the initial position	Check whether the lifting platform is in the initial position and pressed to the micro switch. 7.3.5.1.

Messages in the screen can be different but with the same meaning

9.3. Machine Trouble Shooting Chart

Machine Trouble Shooting Chart

IF A REPLACEMENT PART IS NECESSARY, PLEASE CONTACT YOUR DISTRIBUTOR

Symptom	Possible Cause	Remedy
No power at the control board	No power from power cord	Check power cord, output or supply
	The power box is disconnected from the control board or not connected firmly	Check the connection cable between the power box and the control board

© 2025 QuVend Ltd All rights reserved

No power at the control board	The power box has no DC24V output	Check power box
	Short circuit in other lines	Double check other lines
The screen is black or flickering	The screen failure	Check the screen
	The screen cable is loose	Reconnect the screen cable
Keyboard not working	The keyboard failure	Check the keyboard
	The VMC board failure	Check the VMC board
No product detected	Menu setting is not enabled	Turn on in the menu
	The drop sensor cable is not connected properly	Check the connection cable
	Drop sensor failure	Check the drop sensor



Damaged electrical wiring

Damaged, loose or incorrectly routed wiring may cause intermittent operation, unexpected motor movement, overheating or electrical faults. Before inspecting or replacing a wiring harness, disconnect the machine from the mains supply. Do not operate the machine with damaged wiring. Replacement wiring must be approved for the machine and routed and secured according to the original configuration.

9.4. Temperature controller error code display

Error Code	Detailed explanation
EA1	Compressor current is too large (>5A)
EA2	Compressor open circuit (0A)
EA3	Evaporating fan current is too large (>0.72A)
EA4	Evaporator fan open circuit (0A)
EA5	Condenser fan current is too large (>0.54A)
EA6	Condenser fan open circuit (0A)
E0	The temperature drops or rises too slowly

9.5. Cooling System Troubleshooting.

Only certified cooler technicians can perform any maintenance and repair in coolers.

© 2025 QuVend Ltd All rights reserved



– Incorrect refrigeration settings

Refrigeration and defrost parameters must only be adjusted by authorized service personnel. Incorrect settings may cause excessive ice formation, impaired cooling performance or abnormal operating conditions. If repeated ice formation occurs, do not continue changing parameters without identifying the underlying cause. Follow the approved troubleshooting procedure and verify normal operation before returning the machine to service.



– HOT and Cold surfaces

Refrigeration pipes and components may remain very cold during and immediately after operation. Avoid direct skin contact with cold or hot surfaces. Before carrying out maintenance, disconnect the machine from the electrical supply and allow components to reach a safe handling temperature. Use suitable protective gloves where necessary. Work on the sealed R290 refrigeration circuit is restricted to appropriately qualified and authorized personnel.

The internal temperature does not decrease as expected (EA2)

1. Check that the machine door is fully closed.
2. Check the door seal for visible dirt or damage.
3. Check that the required 20 cm ventilation clearance is maintained.
4. Check that the external ventilation openings and accessible dust filter are clean and unobstructed.
5. Check the temperature setpoint and the displayed error code.
6. Allow sufficient time for the temperature to stabilise after loading or after the door has been open.

If the temperature still does not decrease, remove temperature-sensitive products from sale and contact qualified service personnel.

The operator must not touch, open, pierce or attempt to repair the compressor, refrigerant pipes or any other part of the refrigeration circuit.

“LL” is displayed

“LL” may indicate a temperature-sensor fault, a disconnected sensor or damaged sensor wiring. Switch the machine off and contact qualified service personnel. Sensor replacement is not an operator maintenance task.

Ice formation is visible

Check that the door closes correctly, the door seal is clean, the ventilation openings are unobstructed and the defrost parameters have not been changed without authorisation.

If icing continues, switch the machine off and contact qualified service personnel. Do not remove ice using sharp objects, heaters, hot water or mechanical tools.

Temperature-controller communication failure

Restart the machine once using the normal power switch. If the communication fault remains, switch the machine off and contact qualified service personnel. Internal wiring and controller-address settings must only be checked by authorised service personnel.

Water is visible inside or underneath the machine

Switch the machine off if this can be done safely. Check only for an external spill or a visibly blocked accessible drain outlet. Do not remove electrical or refrigeration covers. If the source cannot be identified safely, contact qualified service personnel

© 2025 QuVend Ltd All rights reserved

9.6. Lift System Troubleshooting

1. Lift not working when buying goods
   First test whether the lift can work in the menu, If it can't work, you need to check the various parts of the elevator. If it can work, check whether the elevator function is turned on in the menu.
2. There are abnormal noises when the elevator rises and falls.
   Power off, raise the lifting platform manually, observe the source of abnormal noise, It usually occurs around the motor and at the metal rails on both sides, and needs to be disassembled for inspection.
3. The machine restarts when the elevator is about to rise
   Check whether the bottom of the elevator is pressed to the micro switch. If it is not pressed, you need to check whether there is something blocking the lifting platform. If it is pressed, you need to check whether it is pressed to the correct position. You can adjust the micro switch or replace the micro switch.
4. After the product comes out, the pickup door cannot be opened
   First check whether the proximity switch is lit in red, if not, adjust the switch position or replace the proximity switch. If the red light is on, check whether the electromagnetic lock is damaged.
5. Anti-theft board does not work when buying goods
   First set the anti-theft board closing time in the menu, set 1800, and check whether the anti-theft board is normal, if not, please check the strut motor, if it is normal, please check the micro switch.

***** If you encounter other difficult to solve or unseen failures, please contact the Vending machine, the Vending machine will have professional engineers to guide and solve.*****

© 2025 QuVend Ltd All rights reserved

10. MAINTENANCE

10.1. UPGRADING FIRMWARE

Occasionally it may be necessary to take advantage of new software features. The software can be upgraded by using a USB flash disk, available at most electronics retailers.

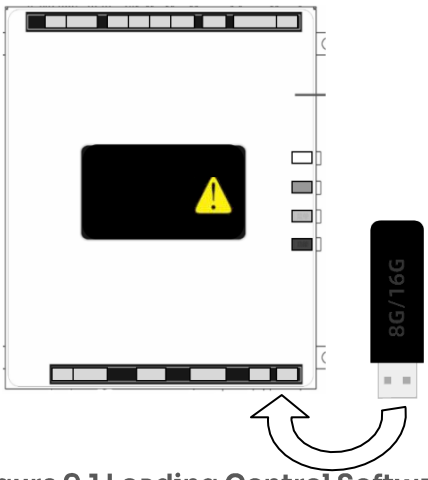

Figure 9.1 Loading Control Software

1. Locate the socket for the U flash disk (Refer to Figure 8.1).
2. Load the U flash disk into the socket (it will only fit one way). Push in until it latches in place. (New motherboard to this step, and then restart will automatically update)
3. Press and hold the red function button. Then press white button to restart. Release the button when the update progress bar appears.
4. After the software has been loaded the Vending machine will re-boot, and display will show the software number, version and name.
5. Remove the U flash disk.
6. Check options and set prices as needed. Note that prices and settings (but not DEX data) are saved and restored during this process.
7. Store the U flash disk in a safe place.

The VOICE program that starts the sequence of loading the program into RAM, This can be upgraded in the same manner as firmware, when in self-check screen, press the full loaded button(green button) until the upgrade progress bar appears

IMPORTANT:
Firmware updates must only be carried out by an authorised operator or qualified service technician using firmware supplied or expressly approved by OPROO for the exact machine model and control-board version. Installing incorrect, modified or unverified firmware may cause loss of settings, malfunction of payment devices, uncontrolled operation of motors or loss of safety-related functions.
Before starting an update:

- export or record the current machine configuration;
- confirm the machine model and control-board version;
- use a reliable FAT32-formatted USB drive;
- make sure the power supply will not be interrupted.

After the update, verify the software version, prices, selection configuration, temperature settings, payment devices, drop sensor, lift settings where fitted, and perform a test vend from every modified selection.

10.2. CLEANING THE VENDING MACHINE EXTERIOR

Clean the Vending machine exterior as necessary using mild household cleaners and water. Dampen a cloth or sponge with the cleaning solution and gently wipe clean the exterior.

1. Do not use chemicals or solvents. These can damage paint, plastic trim and decals.
2. Do not use abrasive cleaners.
3. Do not use a water jet.
4. Do not let water or cleaning solutions contact electrical or electronic components.

© 2025 QuVend Ltd All rights reserved

5. Clean the glass front inside and out with a good window cleaner.

10.3. CLEANING THE VENDING MACHINE INTERIOR

Clean the interior using mild household cleaners and water. Dampen a cloth or sponge with the cleaning solution and gently wipe the interior surfaces clean.

Inspect the interior and the delivery compartment during every refill. Clean the delivery compartment and visibly soiled product trays immediately. As a minimum, perform a documented interior hygiene check at least once per week or more frequently where required by the type of products sold or the applicable hygiene plan.

Remove all products before cleaning an area where cleaning solution could come into contact with the product packaging. Do not reload products until all cleaned surfaces are completely dry.Some Vending machines use a door liner made from ABS plastic. This liner will crack if chemical solvents or harsh detergents are used.

1. Unplug the Vending machine from the power socket.
2. Open the Vending machine door.
3. Do not use chemicals or solvents. These can damage paint, extruded plastic parts and other plastic parts.
4. Do not use abrasive cleaners.
5. Do not use a water jet.
6. Do not let water or cleaning solutions contact electrical or electronic components.
7. Allow all cleaned surfaces to air-dry completely. Do not use an unprotected electrical fan in a wet cleaning area. Reconnect the machine to the power supply only after all surfaces and electrical areas are completely dry.
8. When dry, plug in the Vending machine.

10.4. LUBRICATION WITH LITHIUM GREASE

Once a year the bottle tray rail ball bearings and door moving parts should be lubricated with grease.

1. Pull out the tray. The tray rail is constructed of telescoping channel sections. Apply a very light coating of white lithium grease on the outside of the first two sections, along the top and bottom edges.
2. Apply grease on the inside of the last two sections along the top and bottom.
3. Apply grease (or similar lubricant) to the door lock bolt threads and the door hinges as necessary.
4. Wipe off excess grease. No other lubrication is required.

10.5. LAMP REPLACEMENT Replacing Optional LED Lamps

1. Open the door.
2. Turn off the power to the control board by using the power switch.
3. Locate the LED harness and remove it from the MDB harness.
4. Remove the screws holding the large and small P-clips and remove the LED lamps.
5. Install the replacement LED lamps, using the small and large P-clips and the screws.
6. Connect the LED harness to the MDB harness.
7. Turn on the power to the control board.
8. With the LED lamps operating, turn the LED lamps to direct the light into the Vending machine.
9. Close the Vending machine door.

10.6. UTILITY

A basic software Utility is available for main control boards. Currently it allows an operator to save/load Vending machine configurations, and upgrade firmware. Please contact ORPOO PRO (QUVend Ltd) for more

© 2025 QuVend Ltd All rights reserved

information.

10.7. REPLACING THE POWER CORD- QUALIFIED SERVICE PERSONNEL ONL



–
RISK OF ELECTRIC SHOCK:
Power-cord replacement is not an operator maintenance task. A damaged power cord or plug must be replaced only by the manufacturer, an authorised service company or a similarly qualified person.
The replacement cord must have the same or better voltage rating, current rating, temperature rating, conductor cross-section, protective-earth conductor and mechanical protection as the original cord.
After replacement, the technician must verify:

- correct protective-earth continuity;
- correct polarity and terminal connections;
- secure strain relief;
- absence of exposed conductors or mechanical damage;
- correct routing through the protective slot;
- electrical safety before the machine is returned to service.

TOOLS REQUIRED:

Use this procedure to replace a power cord that is cut, split open or is otherwise damaged or is a hazard. A
¼” nut driver, gloves and protective eyewear are required.

REMOVAL & INSTALLATION

1. Move the Vending machine away from the wall and unplug the power cord from the wall outlet.
2. put the power cord in the protective slot at the back of the Vending machine.
3. The wire retracts into the Vending machine.

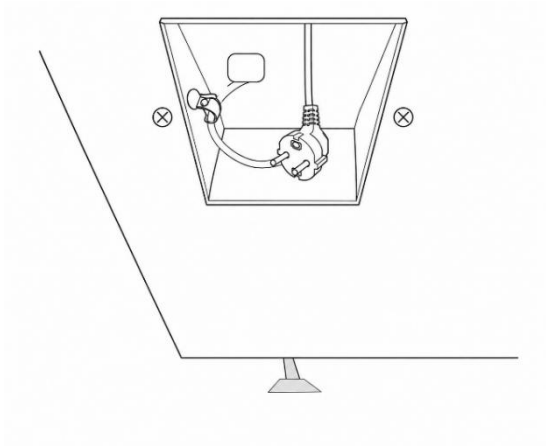

Figure 9.2 Power Cord and Protective Slot

INSTALLATION

Plug the new power cord into the power outlet.

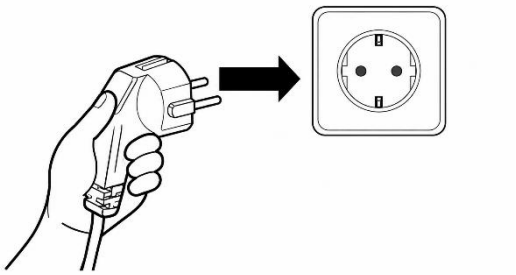

1. Plug the power cord into the power outlet. The power should come on in the Vending machine.
2. If there is no power, check the power outlet at the wall. If there is power at the outlet check for power at the plug end of the power cord.
3. If everything is operational return the Vending machine to its position next to the wall.

10.8. STORING THE VENDING MACHINE

If the Vending machine is to be stored without power for several days or longer, use the following instructions. These instructions are similar to those used to store any refrigerator.

© 2025 QuVend Ltd All rights reserved

1. Unplug the Vending machine from the power outlet.
2. Remove any products from the Vending machine.
3. Clean the inside of the Vending machine using the general directions given in Section 8-5.
4. Leave the Vending machine door open for a day to allow the interior to thoroughly dry.
5. Close the Vending machine door and lock it to protect the interior.
6. Roll up the power cord and place it in the hopper. If the Vending machine is being moved follow the handling and setup procedures given in Section 4.

10.9. MAINTENANCE SCHEDULE:

Cleaning Inspection Time and Content

Content		Cleaning inspection time Cycle: When filling goods	Once a month	Once every six months
Cleaning	Vending machine exterior	○		
	Pickup slot	○		
	Cargo lane		○	
	Evaporator		○	
	Condenser		○	
	Metal keyboard	○		
	Metal keyboard		○	
	Panel	○		
Inspection	Leakage protection		○	
	LED Light		○	
	Set installation status			○

Maintenance intervals may need to be shortened in dusty, humid, heavily used or food-sensitive environments. The operator shall keep records of cleaning, temperature checks, faults and maintenance where required by the applicable hygiene or safety procedures.



Overheating of electrical connections
During scheduled maintenance, authorized service personnel must inspect accessible electrical connectors and wiring for signs of overheating, discoloration, melting, corrosion, looseness or mechanical damage. Disconnect the machine from the electrical supply before inspection or replacement. Any defective connector or wiring assembly must be replaced with an approved component before the machine is returned to service.



Protective earth verification after repair
Whenever an electrical enclosure, cabinet panel or other component connected to protective earth is removed or replaced, all protective earth connections must be restored before the machine is energized. Qualified service personnel must verify the integrity and continuity of the protective earth system after reassembly. The machine must not be returned to operation until this verification has been completed successfully.

10.10. CLEANING THE CONDENSER AND THE AIR FILTER:

1. Switch off the machine and disconnect the mains plug.
2. Make sure the machine cannot be switched on accidentally.
3. Inspect the condenser air inlet, dust filter and accessible ventilation openings.
4. Remove loose dust using a soft brush or a vacuum cleaner.
5. Do not use water, steam, solvents or a high-pressure air jet.
6. Do not bend the condenser fins or damage the refrigerant pipes.
7. If access requires the removal of a

© 2025 QuVend Ltd All rights reserved

protective cover, the work must be carried out by a qualified service technician.

8. Refit all filters and protective covers before reconnecting the machine to the power supply.

A dirty condenser or blocked air filter reduces cooling performance, increases energy consumption and may cause the refrigeration system to overheat.

10.11. REPLACEMENT PARTS

Replacement parts are available from OPROO or its authorised distributor. When ordering a part, provide the exact machine model, serial number and the information shown on the rating plate.

Only original parts or parts expressly approved by OPROO may be used where the component affects electrical safety, mechanical safety, refrigeration safety, food hygiene or EMC compliance.

Fuses, power-supply components, protective devices, power cords, fans, motors and refrigeration components must only be replaced with parts having the specified type and ratings.



– Use of non-approved replacement parts

Only manufacturer-approved replacement parts shall be used for maintenance and repair. Substitution with unapproved plastic, electrical or electronic components may compromise product safety, material compliance or the validity of the original conformity assessment. Replacement components must have the required specifications and applicable material compliance documentation. Do not use parts of unknown origin or composition.

© 2025 QuVend Ltd All rights reserved

10. WIRING DIAGRAM, CONFORMITY CERTIFICATE

Lift model

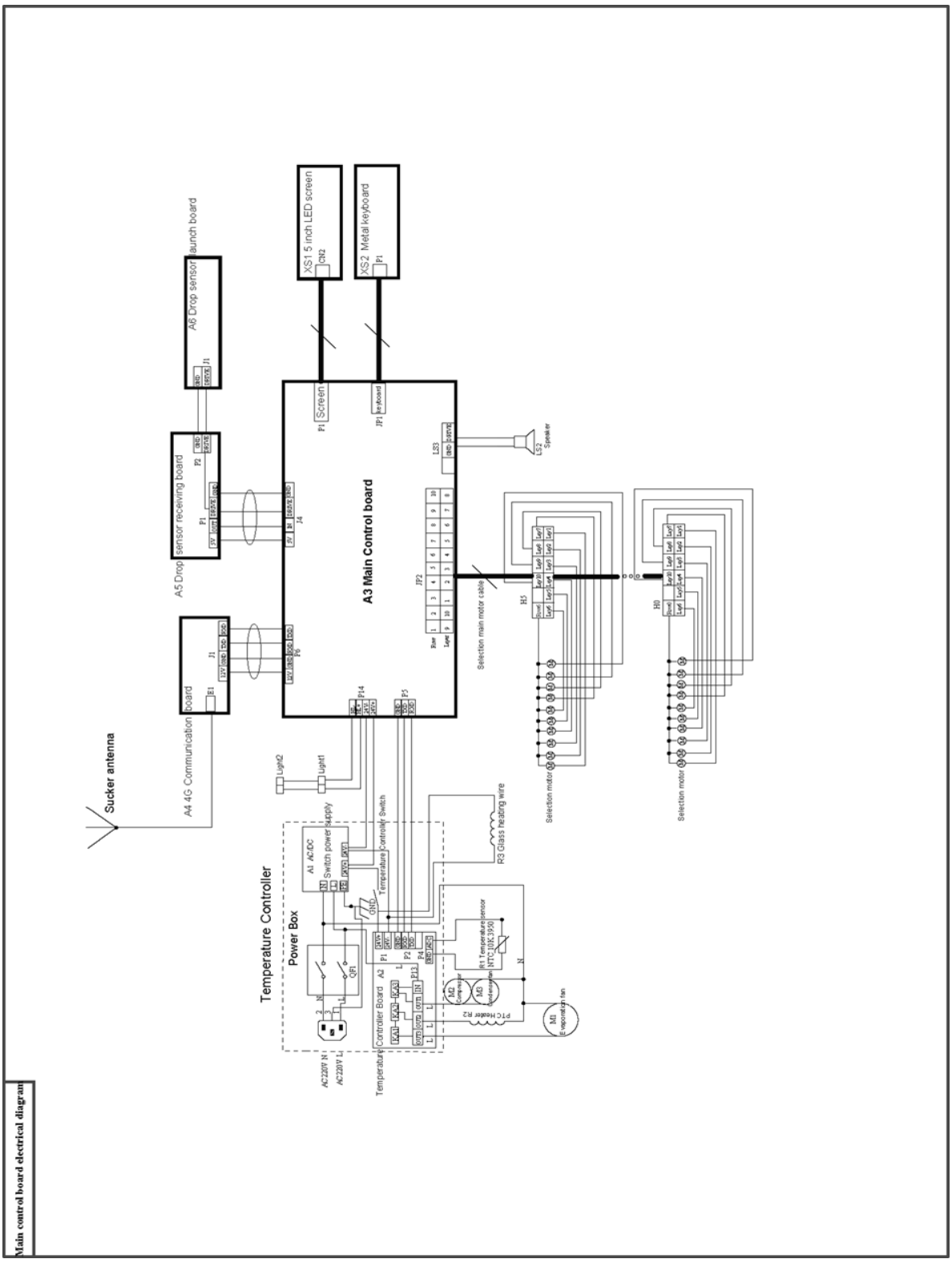

© 2025 QuVend Ltd All rights reserved

© 2025 QuVend Ltd All rights reserved

OPROO **PRO**

ELECTRICAL CIRCUITRY

XY No. 3

OPROO PRO SN06 / SN08 / SN10 / SN12

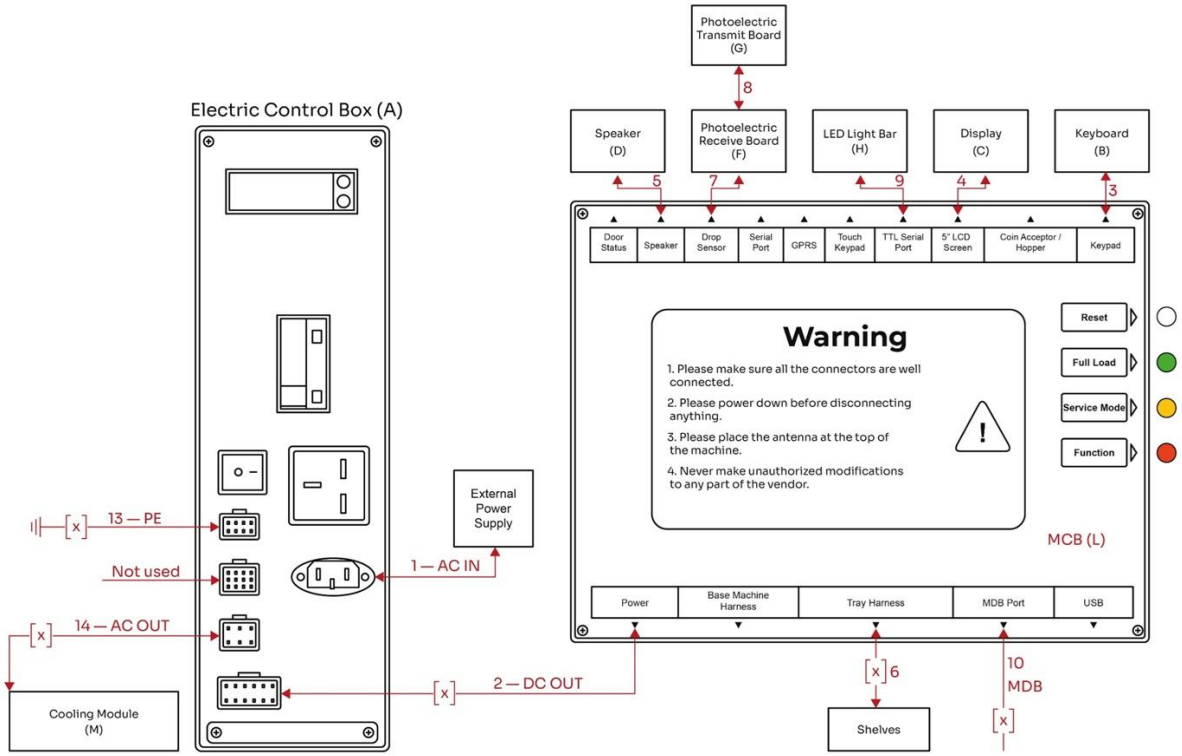

No.	COMPONENT	PART NO.	EUR
A	Electric Control Box		
B	Keyboard		
C	Display		
D	Speaker		
F	IR Sensor Left (PRB)		
G	IR Sensor Right (PTB)		
H	LED		
L	Mainboard Box (MCB)		
M	Cooling Module		

SPECIAL NOTES

Letters = Components

Numbers = Connecting wires

[X] = Denotes in-line connector

Perspective	Version	QuVend Zrt.				
		NM	SN6/8/10/12PRO (CIRCUITRY)			
Design						
Rev.		COD				
App.		Model				
Dt.		SC.	1:01	SIZE	A4	T.:8 S.:8

CONNECTING WIRES

No.	CONNECTING WIRE	PART NO.	EUR	NOTES
1	Power Cable, 3×1.5 mm² / 3×1.0 mm²	XY-No-3-1		
2	DC Output Cable, 15-pin, 4×0.823 mm² / 3×0.205 mm²	XY-No-3-2		
3	Keypad Cable, 10×0.205 mm²	XY-No-3-3		with keypad
4	Display Cable, 14×0.205 mm²	XY-No-3-4		with display
5	Speaker Cable, 2×0.205 mm²	XY-No-3-5		with speaker
6	Lane Harness, 14×0.205 mm² (Motor wiering)	XY-No-3-6		

No.	CONNECTING WIRE	PART NO.	EUR	NOTES
7	PE-Rx Cable, 4×0.326 mm²	XY-No-3-7		with IR Sensor
8	PE-Tx Cable, 2×0.326 mm²	XY-No-3-8		with IR Sensor
9	LED Strip Harness, 2×0.326 mm²	XY-No-3-9		with ledlight
10	MDB Harness, 5×0.326 mm²	XY-No-3-10		MDB (Multi-Drob Bus) Cable interface
13	PE Cable, 2×1.0 mm²	XY-No-3-13		
14	Cooling Harness, 4×1.31 mm / 4×0.823 mm²	XY-No-3-14		

ATTESTATION ◆ ATTESTATO ◆ ATTESTACIÓN ◆ BESCHEINIGUNG ◆ ATTESTATION

Product Service

Compliance Document

No. D 137139 0001 Rev. 00

Holder of Attestation: **Quvend Zrt.**
150 Györmroi út
1103 Budapest
HUNGARY

Product: **Vending machines**
(Commercial Vending Machines)

This Compliance document confirms the compliance with the listed standards on a voluntary basis. It refers only to the particular sample. This compliance document makes no statement regarding the quality or safety of the serial products. For details see: www.tuvsud.com/ps-cert

Test report no.: 64110260136601

Date, 2026-04-21

(Darius Guo)

ATTESTATION ◆ ATTESTATO ◆ ATTESTACIÓN ◆ BESCHEINIGUNG ◆ ATTESTATION

Product Service

Compliance Document

No. D 137139 0001 Rev. 00

Model(s): SN06PRO, SN08PRO, SN10PRO, SN12PRO

Trade name: OPROO

Parameters:

Rated Voltage:	230V
Rated Frequency:	50Hz
Rated Power:	550W
Rated Power For LED Lamp:	15W
Rated Current:	2.9A
Protection Class:	Class I
Degree of Protection:	IPX0
Climate Class:	2
Refrigerant:	R290

Tested according to:

EN 60335-1:2012/A16:2023
EN IEC 60335-2-75:2023/A2:2023
EN IEC 60335-2-89:2022/A11:2022
EN 62233:2008
EN ISO 12100:2010

© 2025 QuVend Ltd All rights reserved

© 2025 QuVend Ltd All rights reserved

Elektronikusan aláírta:
QUVend Zrt
2026-09-25 17:53:41 +0200

EU Declaration of Conformity (DoC)

We, Quvend Ltd as legal manufacturer of OPROO machines, declare under our sole responsibility that the product specified below comply with the relevant European Union directives, regulations, and harmonized standards.

Product Identification:

Product name: **OPROO** vending machine
Type / Model: **PRO SN06, PRO SN08, PRO SN10, PRO SN12, PRO SN08 LIFT, PRO SN10 LIFT, PRO SN10 183, PRO SN10 HS, PRO SN10 HS LIFT**

Legal manufacturer Person authorized to compile the technical file:
Quvend Ltd
Address: 150 Gyömrői út Budapest 1103 HUNGARY.
Email: info@oproo.com., web: http://www.oproo.com
Tel: +36 703625452

Applicable Directives and Regulations:

- 2006/42/EC Machinery Directive (MD)
- 2014/35/EU Low Voltage Directive (LVD)
- 2014/30/EU Electromagnetic Compatibility Directive (EMC)
- 2011/65/EU RoHS Directive and (EU) 2015/863 amendment
- 2012/19/EU WEEE Directive
- 2009/125/EC Ecodesign Directive and Regulation (EU) 2019/2024
- Regulation (EU) 2017/1369 and Delegated Regulation (EU) 2019/2018 (Energy Labelling)

Applied Harmonized Standards:

- EN 55014-1:2021 – Electromagnetic compatibility – Requirements for household appliances, electric tools and similar apparatus – Part 1: Emission
- EN 55014-2:2021 – Electromagnetic compatibility – Requirements for household appliances, electric tools and similar apparatus – Part 2: Immunity – Product family standard
- EN 61000-3-2:2019 + A1:2021 – Electromagnetic compatibility (EMC) – Part 3-2: Limits – Limits for harmonic current emissions (equipment input current ≤16 A per phase)
- EN 61000-3-3:2013 + A2:2021 – Electromagnetic compatibility (EMC) – Part 3-3: Limits – Limitation of voltage changes, voltage fluctuations and flicker in public low-voltage supply systems (equipment rated current ≤16 A per phase, not subject to conditional connection)
- EN 60335-1:2012 + A15:2021 – Household and similar electrical appliances – Safety – Part 1: General requirements
- EN 60335-2-75:2004 + A2:2008 – Household and similar electrical appliances – Safety – Part 2-75: Particular requirements for commercial dispensing appliances and vending machines
- EN IEC 60335-2-89:2022 + A11:2022 – Household and similar electrical appliances – Safety – Part 2-89: Particular requirements for commercial refrigerating appliances and ice-makers with an incorporated or remote refrigerant unit or motor-compressor
- EN 62233:2008 – Measurement methods for electromagnetic fields of household appliances and similar apparatus with regard to human exposure
- EN ISO 12100:2010 – Safety of machinery – General principles for design – Risk assessment and risk reduction
- EN IEC 63000:2018 – Technical documentation for the assessment of electrical and electronic products with respect to the restriction of hazardous substances
- RoHS (2011/65/EU and amendments) – Restriction of the use of certain hazardous substances in electrical and electronic equipment
- (EU) 2019/2024, (EU) 2021/340, (EU) 2019/2018, (EU) 2021/341 – Ecodesign and energy labelling regulations for refrigerating appliances with a direct sales function

Factory certificates:

- ISO 14001
- ISO 9001

QUVend certificates:

- ISO 9001

We hereby declare that the product(s) specified above conform to the essential requirements of the above directives and standards. This declaration is issued under the sole responsibility of the legal manufacturer.

Place and Date: Budapest 25.09.2026

QUVend Zrt.
1103 Budapest Gyömrői út 150.
Adószám: 25964266-2-42
Name: Alex Kishonti
Managing Director

11. LIMITED WARRANTY

General Terms and Conditions for the Sale and Delivery of New Equipment
(Published: 30th September 2025)

Quvend Ltd. 150 Gyömrői út Budapest 1103 Hungary info@quvend.com

I. GENERAL PROVISIONS

1. **Scope**
   These Terms and Conditions apply to all deliveries of new machinery and equipment to business customers and legal entities.
2. **Exclusion of Conflicting Terms**
   Any differing terms and conditions provided by the Buyer are expressly rejected and will not be binding, even if not explicitly contested by us. By placing an order, accepting our order confirmation, or receiving delivery, the Buyer acknowledges and accepts these Terms and Conditions.
3. **Written Agreements**
   Any amendments, deviations, or additional arrangements require written confirmation from us to be valid. This also applies to any waiver of this written form requirement.
4. **Intellectual Property**
   All drawings, designs, calculations, and related documents remain our property and are protected by copyright. They may not be disclosed to third parties without our prior written consent.

II. ORDERS

1. **Confirmation**
   Our quotations are non-binding until confirmed in writing (including by email). No contract is formed without written confirmation. The sending of the invoice after the order shall be deemed as written confirmation of the order. In the case of delivery without prior confirmation, our invoice shall be deemed to constitute the confirmation.
2. **Order Scope**
   We reserve the right to make minor technical or formal modifications, provided that the function, usability, and value of the product are not materially impaired. If such a change is unreasonable for the Buyer, they may withdraw from the contract. Further claims are excluded.
3. **Technical Data**
   Technical specifications in our offers, catalogues, and illustrations serve as approximate values unless explicitly confirmed as binding. Compliance with manufacturer-country safety and acceptance standards is authoritative for our deliveries.

III. DELIVERY OBLIGATIONS

Our delivery obligation depends on the timely and proper supply of materials by our own suppliers. We may withdraw from the contract without liability for damages if delivery becomes impossible due to force majeure, strikes, government restrictions, transportation delays, or other events beyond our control.

© 2025 QuVend Ltd All rights reserved

IV. DELIVERY TIME AND RISK TRANSFER

We are not responsible for delivery delays caused by transportation issues between the manufacturer and the supplier. Deliveries are made by EXW (Ex Works). Risk of loss or damage passes to the Buyer once goods are handed over to the carrier.

V. PRICES

1. **Price Basis**
Prices are ex works and include packaging but exclude VAT, customs, environmental charges, and other duties unless otherwise agreed. Fixed prices require written confirmation.
2. **Price Changes**
Prices are quoted per order. We reserve the right to adjust prices without prior notice.

VI. PAYMENT TERMS

Unless otherwise agreed, payment must be made in advance by bank transfer.
Late Payment and Retention of Title
In case of delayed payment, the Buyer shall pay default interest at the base rate set by the central bank of the invoice currency plus 3%. The Seller shall not be obliged to perform until the invoiced amount has been credited to its bank account and retains full title to the equipment until such payment is received in full.

VII. WARRANTY FOR MATERIAL DEFECTS

1. **Quality Specification**
The quality and characteristics of our products are defined in our catalogues and may be verified in our showroom.
2. **Inspection Duty**
The Buyer must inspect the goods upon receipt and notify us of any defects in writing within 14 days. Hidden defects must be reported immediately upon discovery, but no later than five days after detection.
3. **Exclusions from Warranty**
No warranty claims may be made in the following cases:
- Minor Deviations: Slight variations from the agreed specifications or insignificant impairments of usability do not constitute defects.
- Normal Wear and Tear: Natural deterioration of parts through regular usage is excluded from warranty coverage.
- Improper Handling: Damage arising after transfer of risk due to careless or incorrect use, insufficient maintenance, lime or scale deposits, unsuitable operating conditions, overuse, or use with inappropriate consumables is not covered.
- Unsuitable Conditions: Defects caused by defective installation work, inadequate site conditions, or adverse external influences (chemical, electrochemical, electrical, or environmental factors) are excluded.
- Intentional or External Damage: Manipulation, vandalism, or other non-contractual external impacts will not be covered.
- Unauthorized Modifications or Repairs: Any warranty is void if the Buyer or third parties perform alterations, adjustments, or repairs without our prior approval, or if such work is carried out improperly.

© 2025 QuVend Ltd All rights reserved

- Product Identification Removed: Claims are excluded where product identification such as serial numbers, CE labels, or date plates have been removed, altered, or are illegible.
- Consumable Parts: Components that are expected to require replacement due to wear (e.g., seals, gaskets, fuses, light bulbs, batteries) are outside the scope of warranty.

The Buyer may not reject delivery or refuse acceptance on the grounds of minor or insignificant defects.

4. **Warranty Remedy**
   At our discretion, defective goods will be repaired or replaced free of charge. The Buyer is responsible for removal and reinstallation, as well as related costs.
5. **Warranty Period**
   Warranty coverage for vending machines (type SN) and spare parts is limited to 12 months, what can be extended by further 12 or 24 months upon individual agreement.
6. **Buyer-Provided Accessories**
   We are not liable for defects in equipment or accessories supplied by the Buyer or third parties.
7. **Returns**
   Defective goods must either be returned to us freight-paid or made available for inspection at the Buyer's premises.

VIII. LIMITATIOY OF LIABILITY

All further claims for damages, regardless of legal basis, are excluded unless caused by intentional misconduct or gross negligence.
Cases of faulty delivery are otherwise governed by precepts of the Civil Code of Hungary (with special respect to the fact that our company is primarily obliged to correct delivery, whereas Buyer is obliged to immediately report such fault to our company). Our company will only assume liability for damages occurring due to causes attributable to it and proven and the maximum amount of contract (order and its confirmation, in lack of this, the sum on the invoice).

IX. TERMINATION OF CONTRACT

The contract between the parties shall be valid for a fixed term, until the performance of the service/consideration specified in the order and its acceptance. The contracting parties may at any time amend or terminate the contract by mutual agreement in writing. Our company hereby informs the Client that performance shall commence immediately upon receipt of the order, in accordance with the deadline indicated in the confirmation. In view of the fixed term, the contract may not be terminated unilaterally. Either party may terminate the contract only if the other party fails to fulfill its contractual obligations or otherwise commits a material breach of the contract.

X. USE OF SUBCONTRACTORS

For the provision of its services, our company may engage subcontractors. The service provided may include intermediary services. Such intermediary services shall be indicated on the final invoice.

XI. PRODUCT INFORMATION

Product descriptions in catalogues, brochures, or advertising do not constitute guarantees unless expressly confirmed in writing.

© 2025 QuVend Ltd All rights reserved

XII. MISCELLANEOUS

1. **Withdrawal Rights**
   The Buyer may withdraw from the contract only in cases where we are responsible for a breach of duty.
2. **Data Protection**
   Personal data will be processed and stored in compliance with applicable data protection laws.
3. **Language**
   This English version is provided for convenience only. The original legal version shall prevail.

XIII. GOVERING LAW AND JURISDICTION

1. **Place of Performance:**
   Hungary.
2. **Jurisdiction:**
   Budapest shall be the exclusive place of jurisdiction for all disputes.
3. **Applicable Law:**
   Hungarian law applies exclusively. The UN Convention on Contracts for the International Sale of Goods (CISG) is excluded.

XIV. IWEEE COMPLIANCE

QuVend Ltd., in its capacity as the importer of equipment into the European Union (Hungary), shall duly register with the competent authority and discharge all WEEE-related obligations in Hungary, including the payment of the applicable fees, in accordance with Directive 2012/19/EU and its national transposition. In the event of any subsequent cross-border supply of such equipment within the territory of the European Union, the Buyer, as the first placer of the equipment on the market in the relevant Member State, shall bear exclusive responsibility for ensuring compliance with all WEEE obligations in that jurisdiction, including but not limited to registration, reporting, and payment of fees, pursuant to the applicable national laws and regulations.

© 2025 QuVend Ltd All rights reserved

OPROO



© 2025 QuVend Ltd All rights reserved